Technical Catalogue

International standard moulds

For any technical information regarding particular pieces in current production or at the design stage please contact our technical office.

See our web site for details of how to order and of our delivery service.

The description contained in this catalugue are not binding. We reserve the rigth to modify components and accessories for technical or commercial reason.

May 2017

via Watt 1/1 - 41012 Carpi (Mo) - Tel. 059 643050 - E-mail: info@ca-be.it

TECHNICAL CATALOGUE

International standard moulds

catalog and documents on-line:
Web: www.ca-be.it **E-mail:** info@ca-be.it

International Standard moulds with precision grinding planes.

ME SERIES

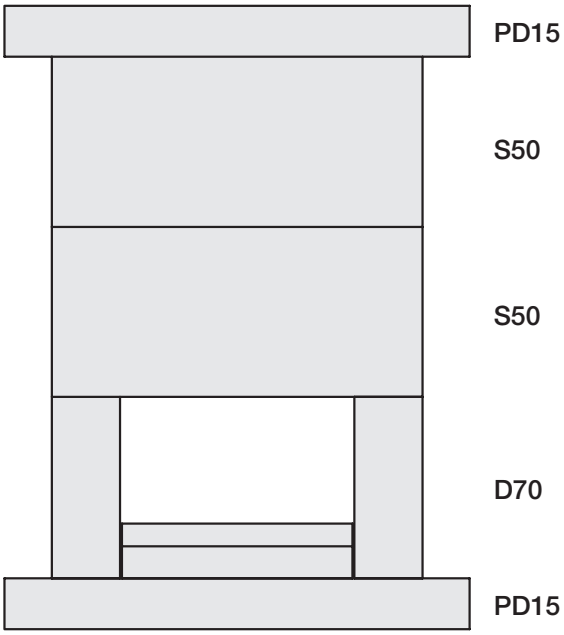

MEM SERIES

156	196	246	296	346	396	446	496	546	596
156	196	246	296	346	396	446	496	546	596
196	246	296	346	396	446	496	546	596	646
246	296	346	396	446	496	546	596	646	696
296	346	396	446	496	546	596	646	696	796
346	396	446	496	546	596	646	696	796	896
	446	496	546	596	646	696	796	896	
	496	546	596	646	696	796	896		
		596	646	696	796	896			
			696	796					

S50 cavity plates with precision grinding external sides centered with the holes.

External sides of the S50 cavity plates have a precise reference ridge.

STEEL NORMALLY USED

MATERIAL NO.	DIN DESIGNATION	AISI DESIGNATION	CHEMICAL COMPOSITION	HARDNESS HB	SUPPLAY STATUS	APPLICATION
1.1730	C 45	1045	C 0,45 Si 0,3 Mn 0,7	190 - 230	annealed stress relieved	Moulding plates unhahardened for plastic and rubber.
1.2738	40 CrMnNiMo 8 6 4	P20+NI	C 0,40 Mn 1,5 Cr 1,9 Ni 1,0 Mo 0,2	280 - 325	pre-hardened	Mould and cavity plates. Constant core hardness and excellent polishability. Suitable for photo-engraving and the ionic and gas nitriding.

STEEL ON DEMAND

MATERIAL NO.	DIN DESIGNATION	AISI DESIGNATION	CHEMICAL COMPOSITION	HARDNESS HB	SUPPLAY STATUS	APPLICATION
1.2311	40 CrMnMo 7	P20	C 0,40 Mn 1,5 Cr 1,9 Mo 0,2	280 - 325	pre-hardened	Moulding plates for plastic and diecasting.
1.2312	40 CrMnMoS 86	P20+S	C 0,40 Mn 1,5 Cr 1,9 Mo 0,2 S 0,05	280 - 325	pre-hardened	Moulding plates for diecasting. Not suitable for cavity plates.
1.2083	X 42 Cr 13	420	C 0,42 Cr 13,0	220 - 230	annealed	Cavity plates for injection plastic mainly when is chemically aggressive.
1.2085	X 33 CrS 16	422+S	C 0,33 Cr 16,0 S 0,05 Ni 0,5	280 - 325	pre-hardened	Moulding plates corrosion resistant. Not suitable for cavity plates.
1.2714	56 NiCrMoV 7	SAE L6	C 0,56 Cr 1,1 Ni 1,7 Mo 0,5 V 0,1	350 - 410	pre-hardened	Cavity plates with hight resistance and toughness. Mainly used with higt moulding pressure.
1.2343	X 38 CrMoV 51	H11	C 0,38 Si 1,0 Cr 5,3 Mo 1,3 V 0,4	220 - 230	annealed	Cavity plates and inserts for die casting and injection mould.

Supply tolerances: ground surfaces with planarity 0,005 mm, squaring 0,01 mm and distance between guide holes 0,005 mm for each 100 mm of lengh.

Standard components: guide pillar, guide bush and centring sleeve with hardness 61-63 HRC. Material: steel 1.7131

via Watt 1/1 - 41012 Carpi (Mo) - Tel. 059 643050 - E-mail: info@ca-be.it

STANDARD PLATES

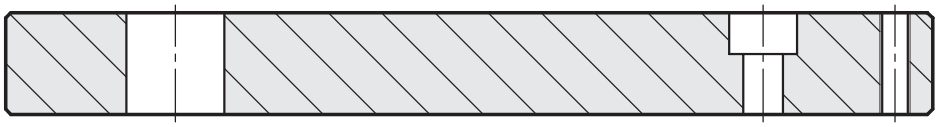

PD15

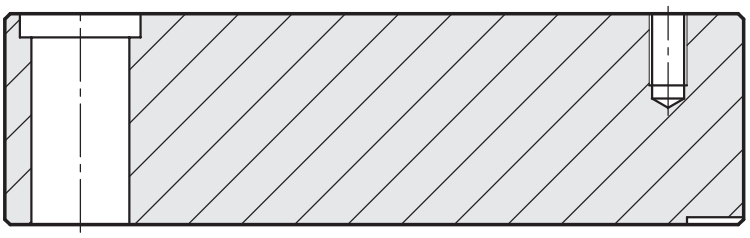

S50

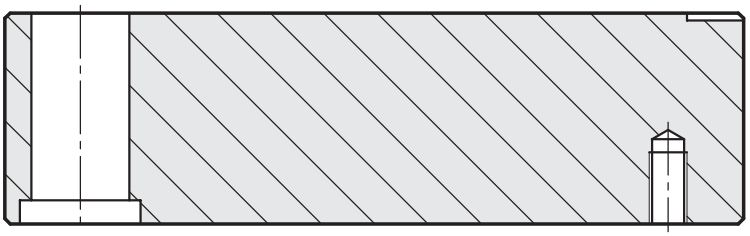

S50

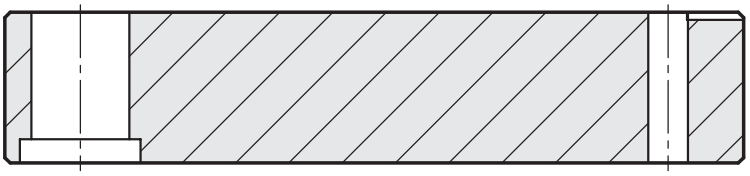

S60

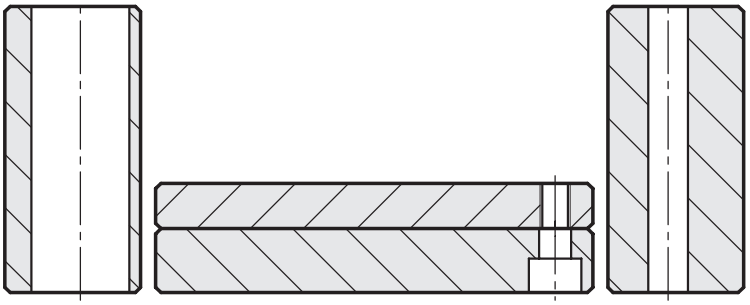

D70

T80
T85

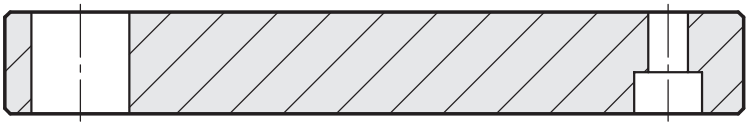

PF45

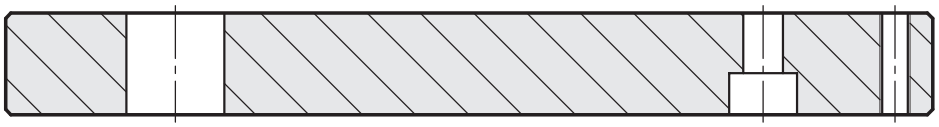

PD15

STANDARD PLATES

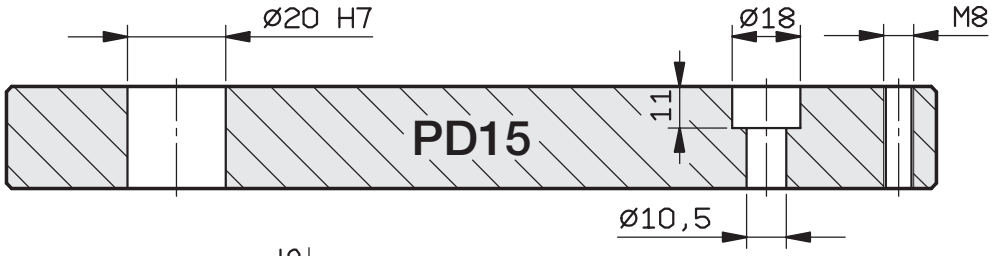

22	1730

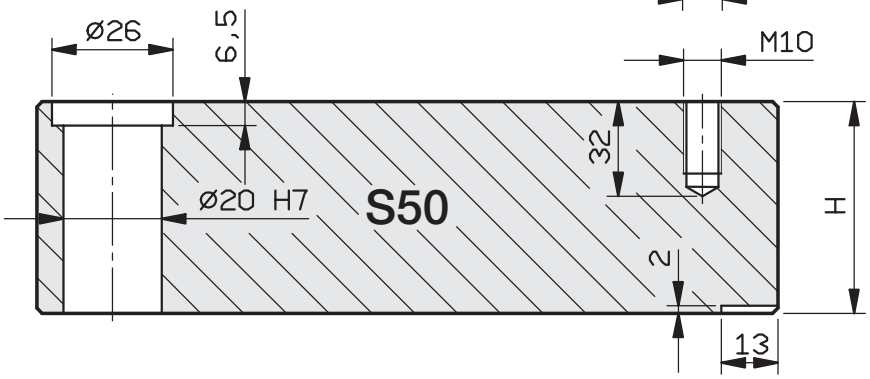

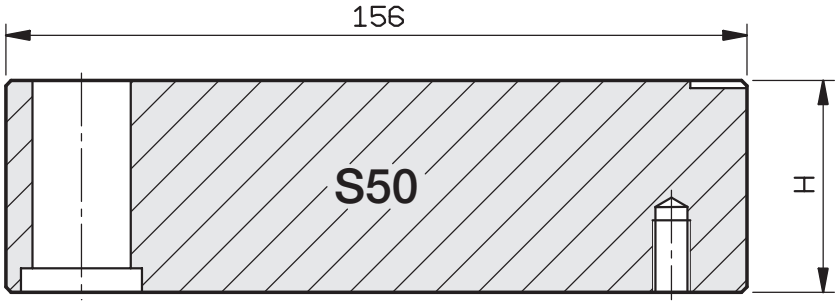

27	1730 - 2738
36	
46	
56	
66	
76	

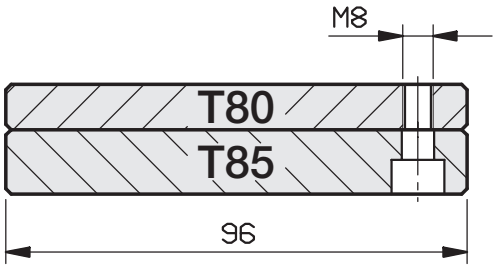

9	1730
17	

56	1730
76	
96	

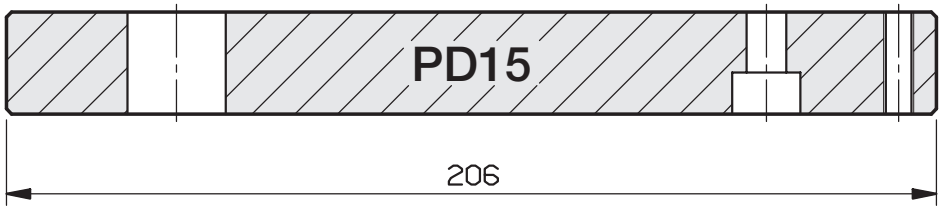

22	1730

via Watt 1/1 - 41012 Carpi (Mo) - Tel. 059 643050 - E-mail: info@ca-be.it

156 x 156

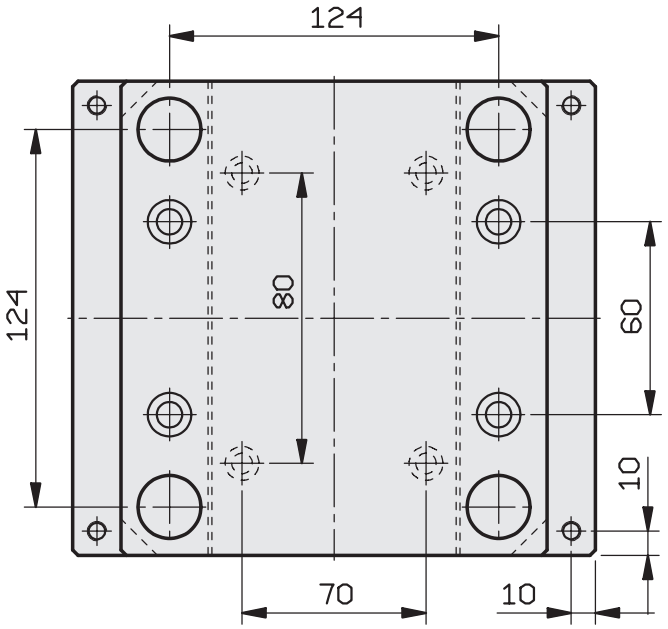

156 x 196

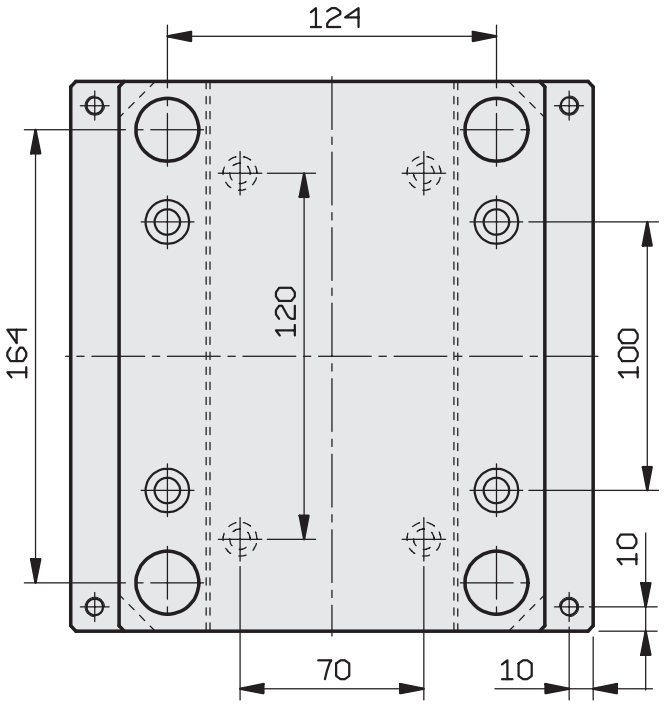

156 x 246

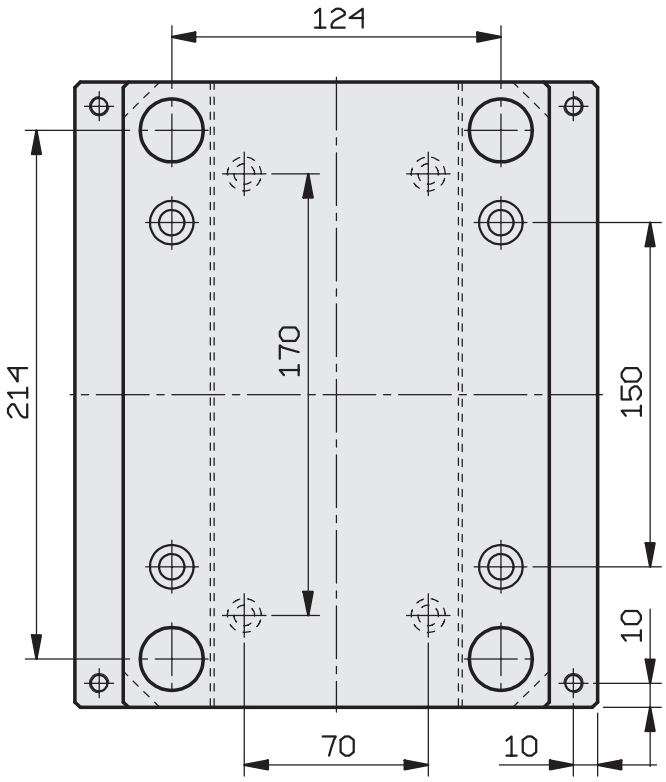

STANDARD PLATES

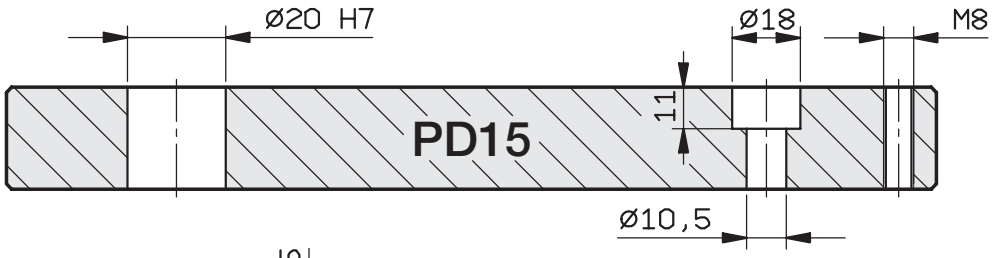

22	1730

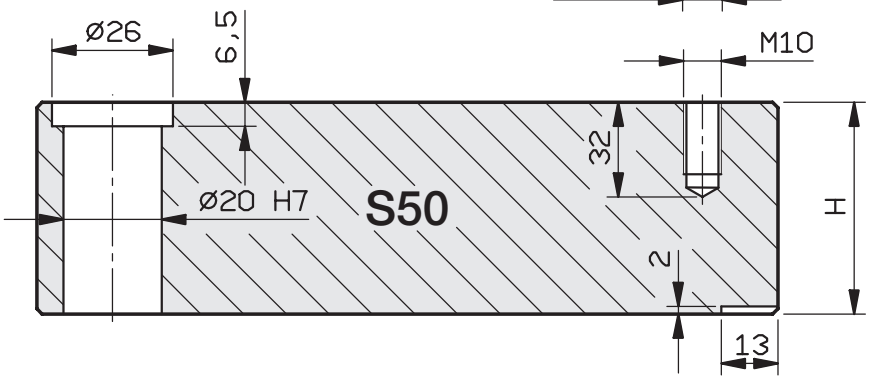

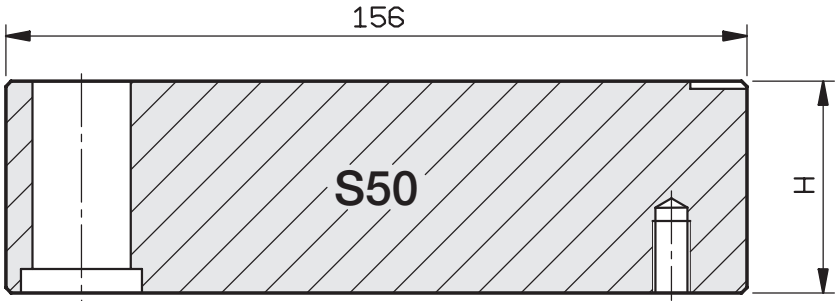

27	1730 - 2738
36	
46	
56	
66	
76	

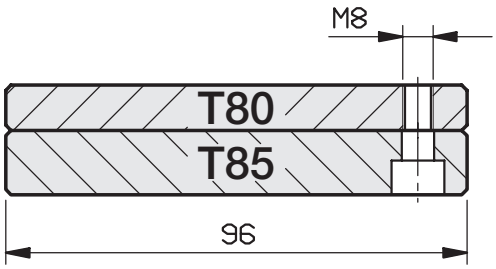

12	1730
17	

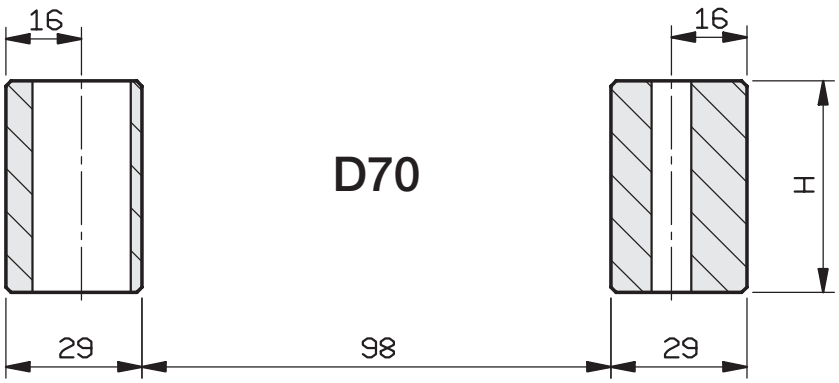

56	1730
76	
96	

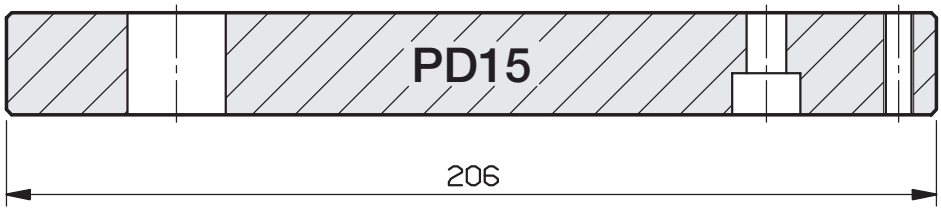

22	1730

via Watt 1/1 - 41012 Carpi (Mo) - Tel. 059 643050 - E-mail: info@ca-be.it

156 x 296

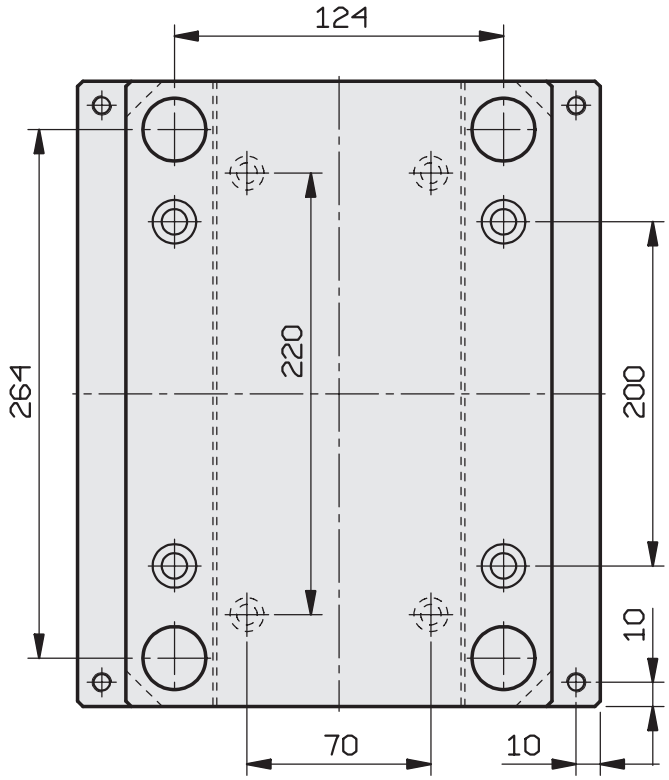

156 x 346

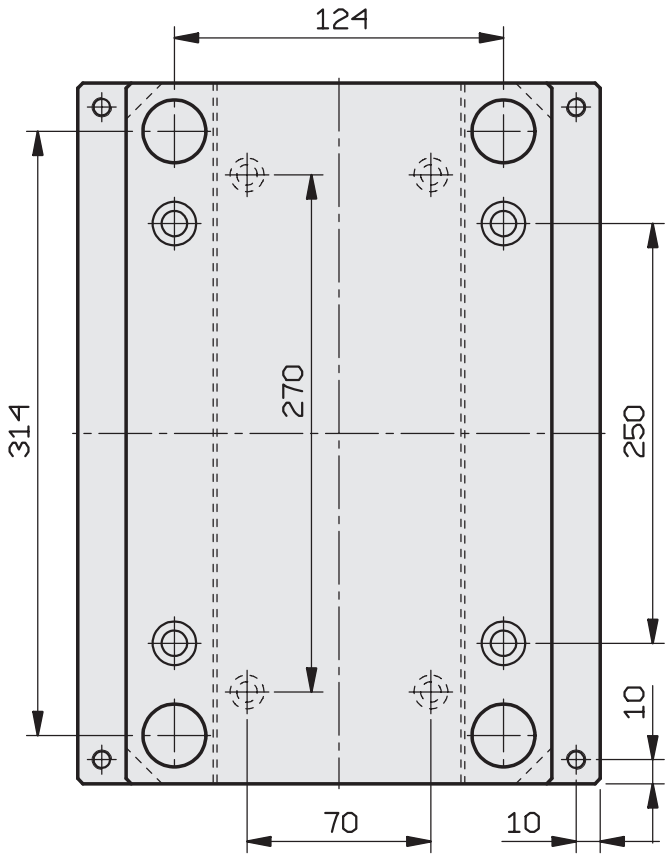

STANDARD PLATES

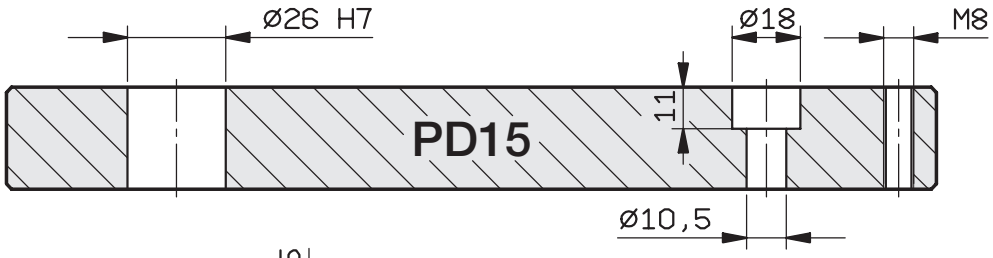

27	1730

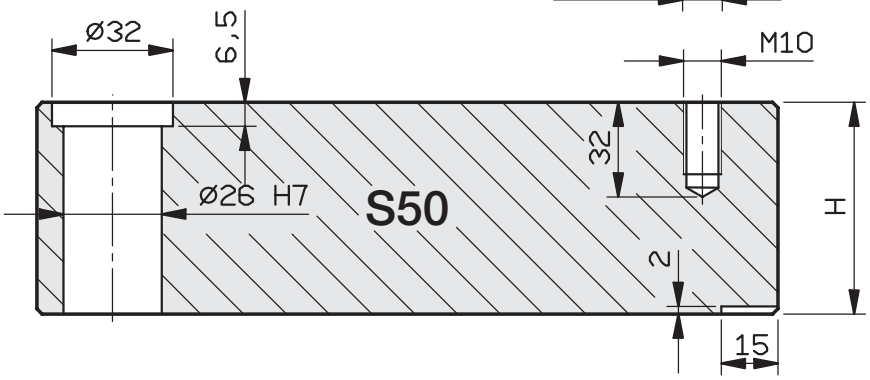

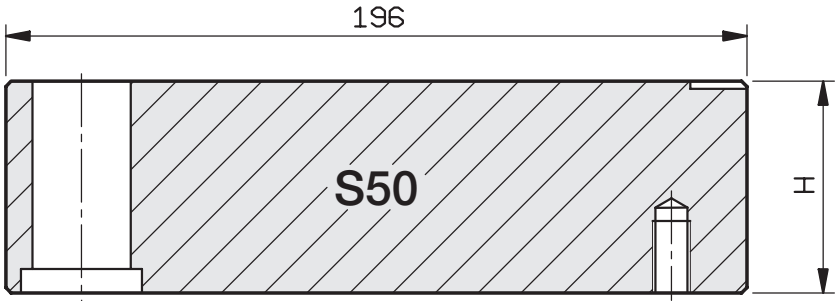

27	1730 - 2738
36	
46	
56	
66	
76	
96	

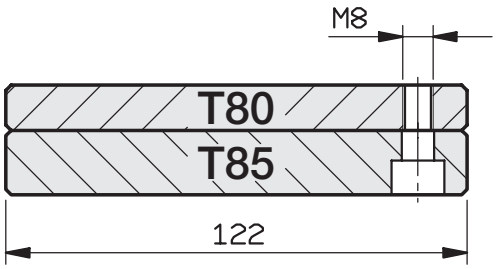

12	1730
17	

56	1730
76	
96	

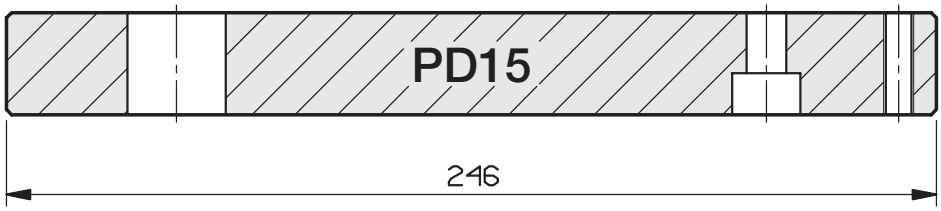

27	1730

via Watt 1/1 - 41012 Carpi (Mo) - Tel. 059 643050 - E-mail: info@ca-be.it

196 x 196

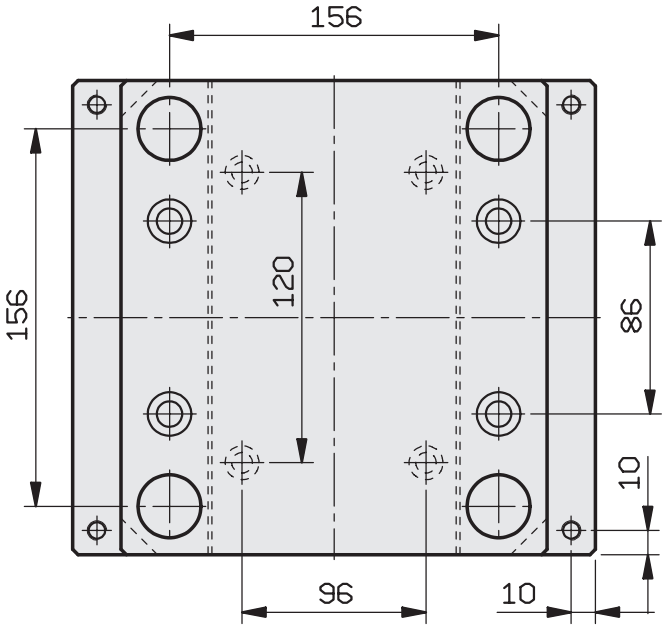

196 x 246

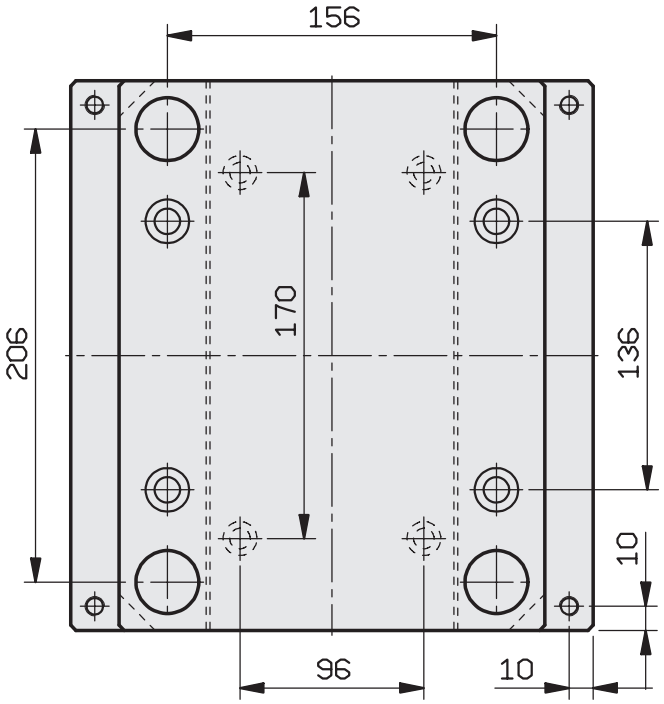

196 x 296

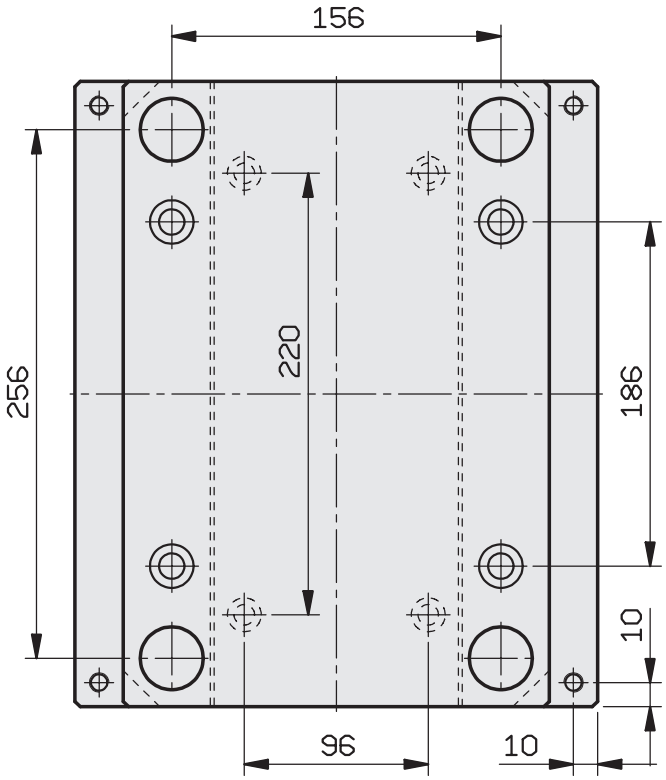

STANDARD PLATES

27	1730

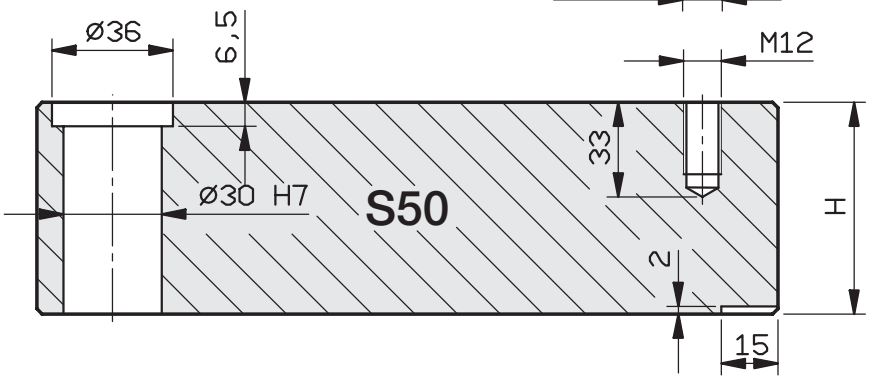

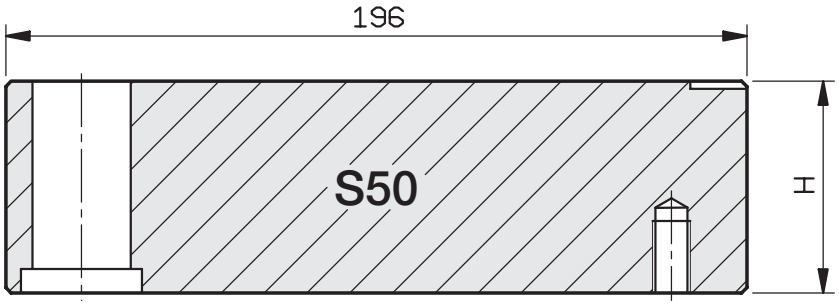

27	1730 - 2738
36	
46	
56	
66	
76	
96	

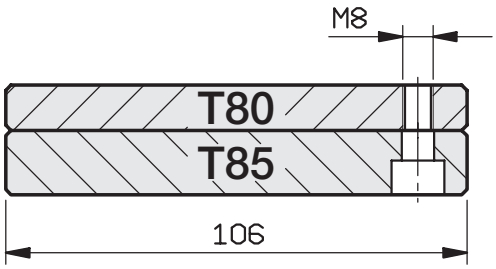

17	1730
22	

56	1730
76	
96	

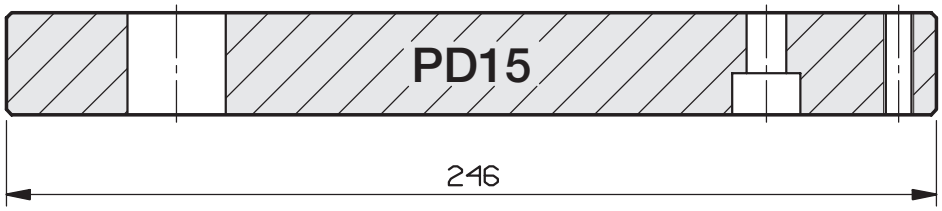

27	1730

via Watt 1/1 - 41012 Carpi (Mo) - Tel. 059 643050 - E-mail: info@ca-be.it

196 x 346

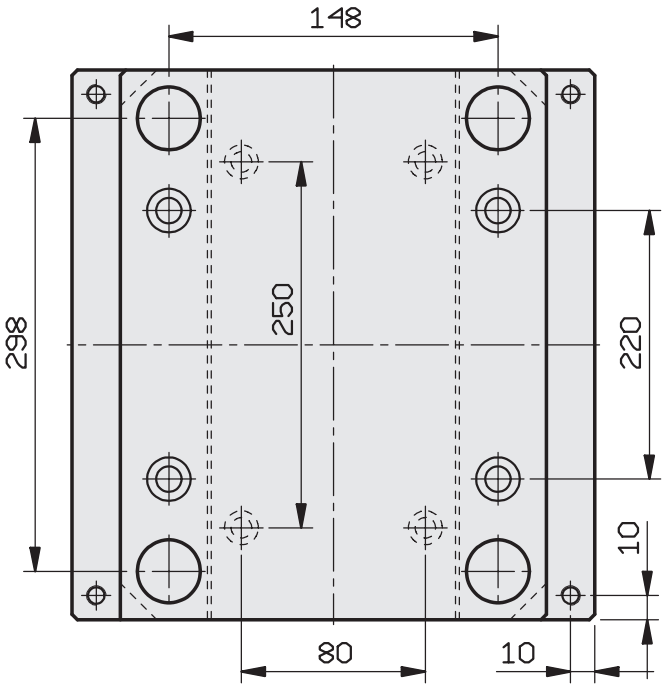

196 x 396

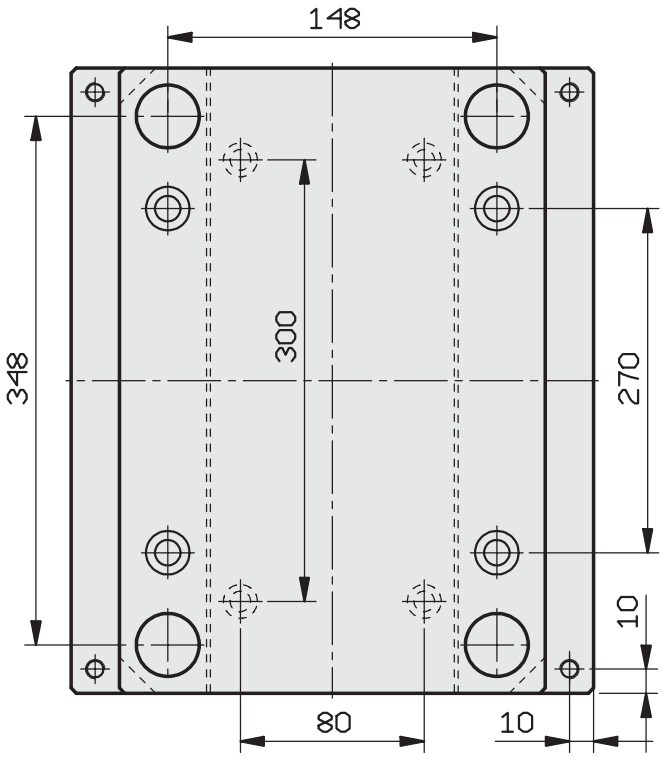

196 x 446

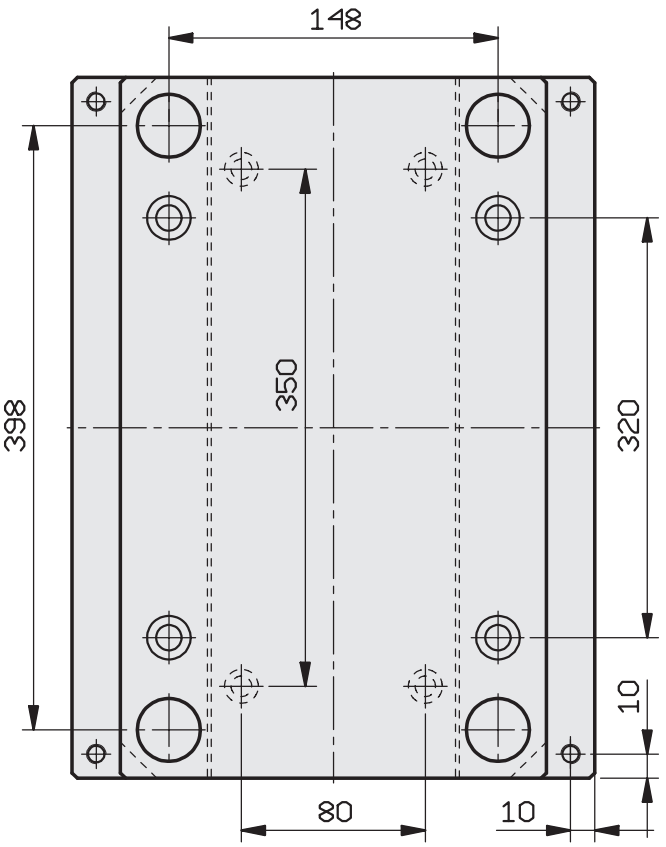

196 x 496

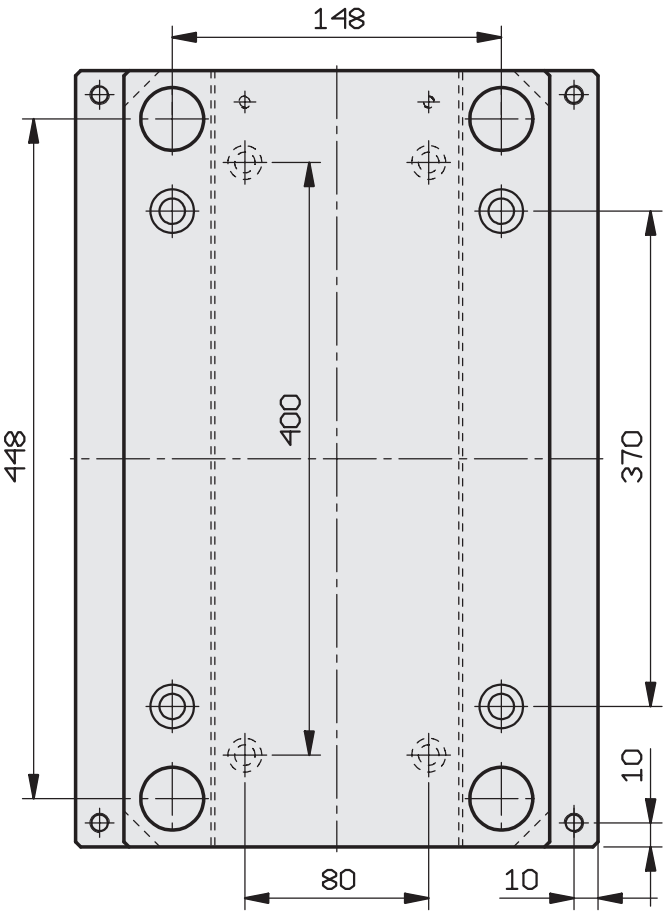

STANDARD PLATES

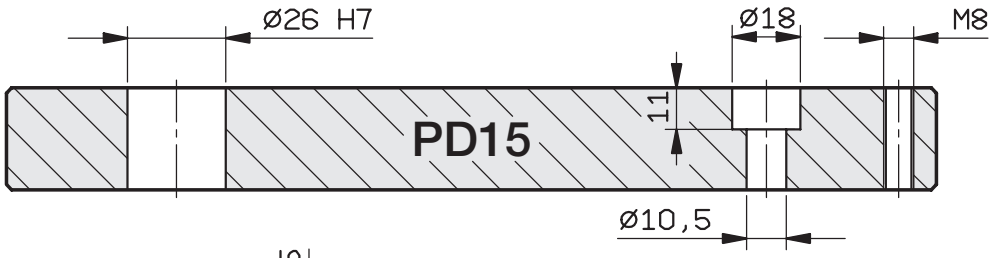

27	1730

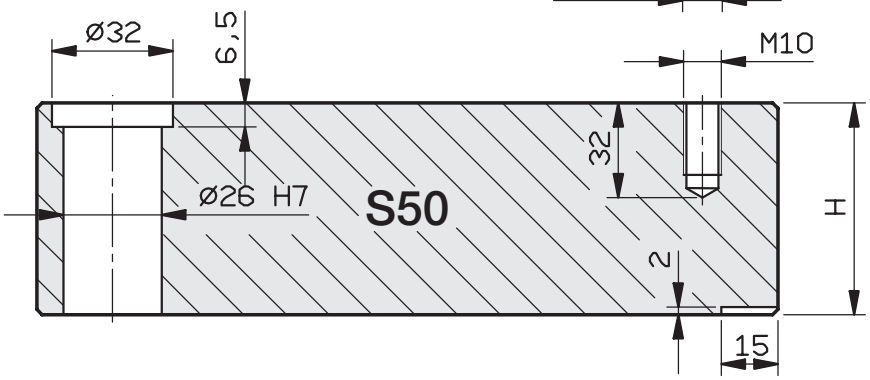

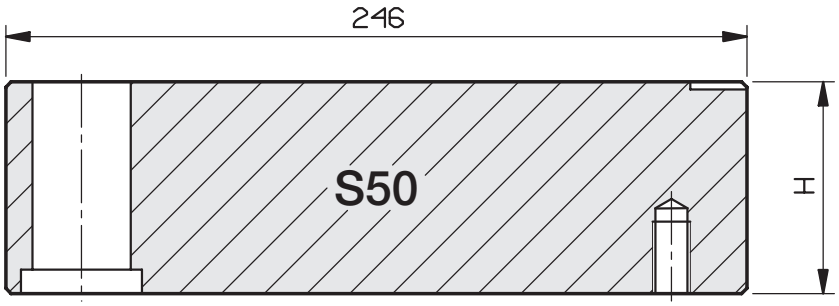

27	1730 - 2738
36	
46	
56	
66	
76	
96	

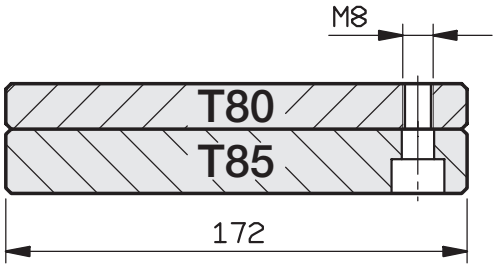

12	1730
17	

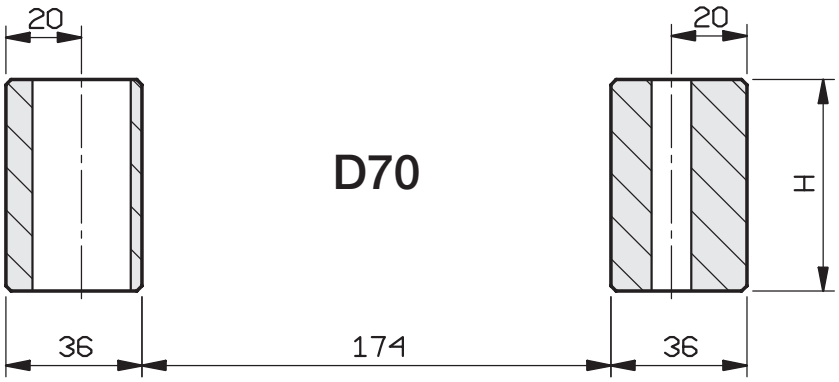

56	1730
76	
96	

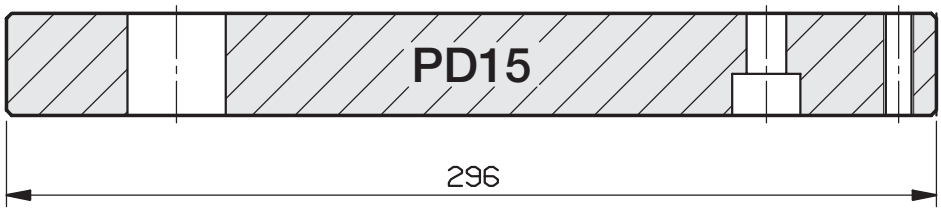

27	1730

via Watt 1/1 - 41012 Carpi (Mo) - Tel. 059 643050 - E-mail: info@ca-be.it

246 x 246

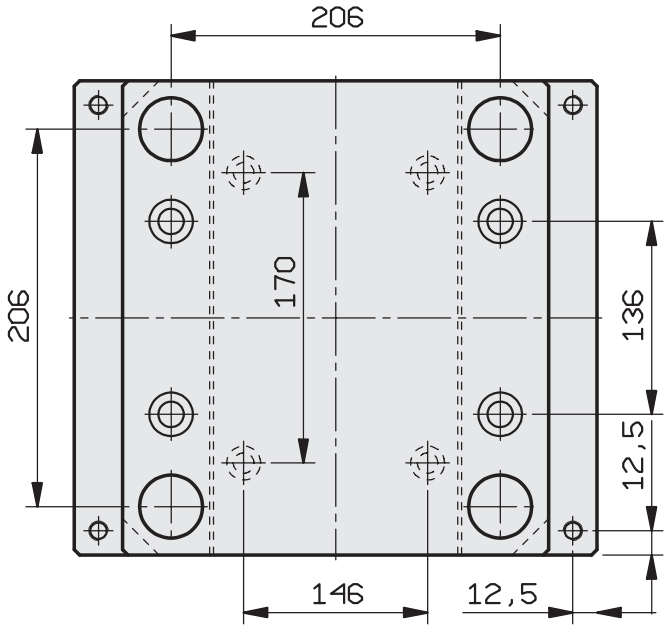

STANDARD PLATES

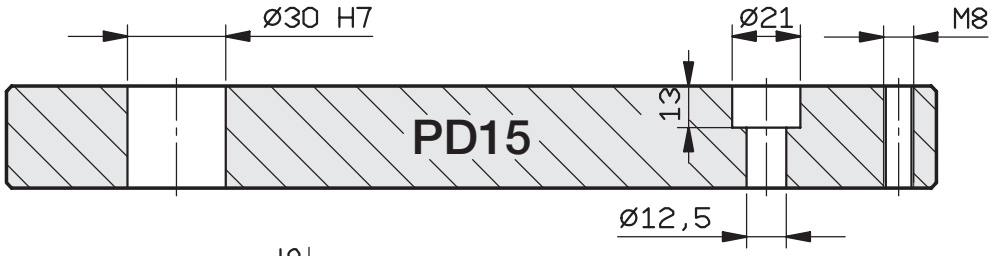

27	1730

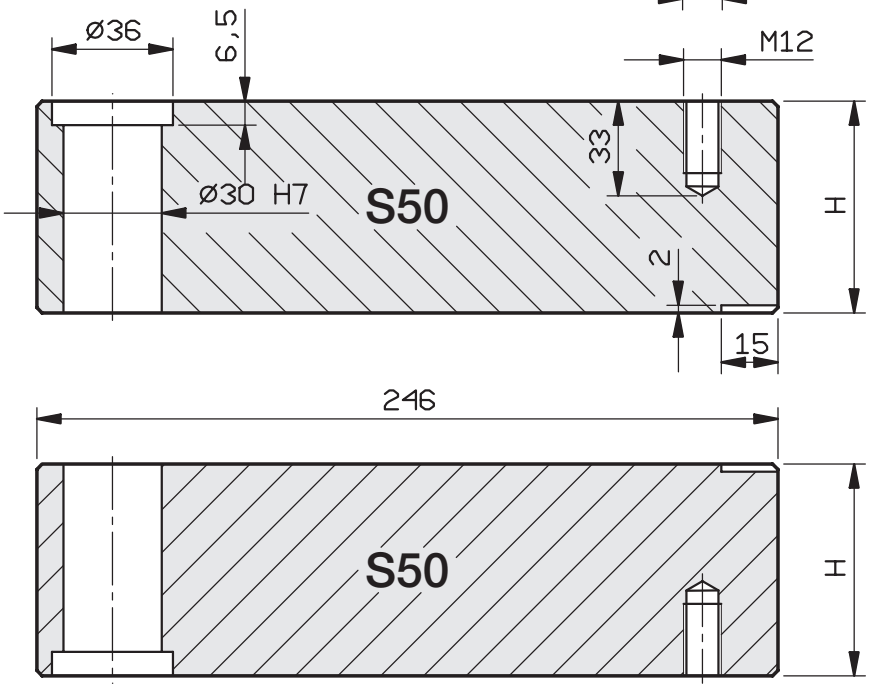

27	1730 - 2738
36	
46	
56	
66	
76	
96	

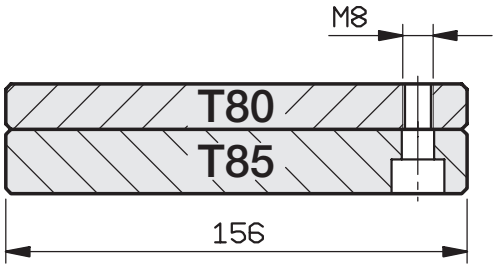

12	1730
22	

56	1730
76	
96	

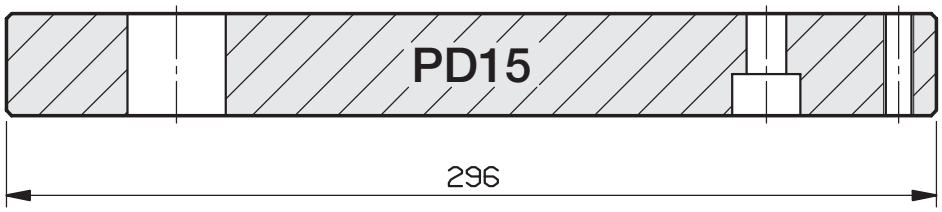

27	1730

via Watt 1/1 - 41012 Carpi (Mo) - Tel. 059 643050 - E-mail: info@ca-be.it

246 x 296

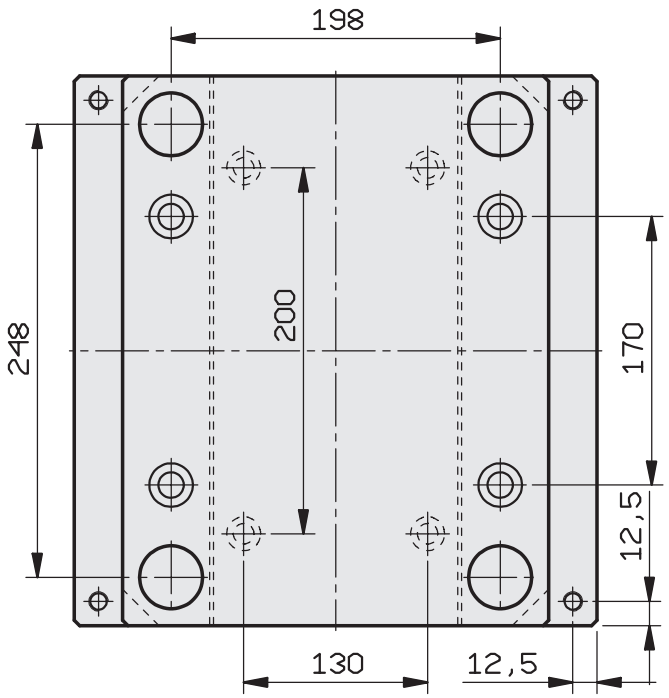

STANDARD PLATES

27	1730

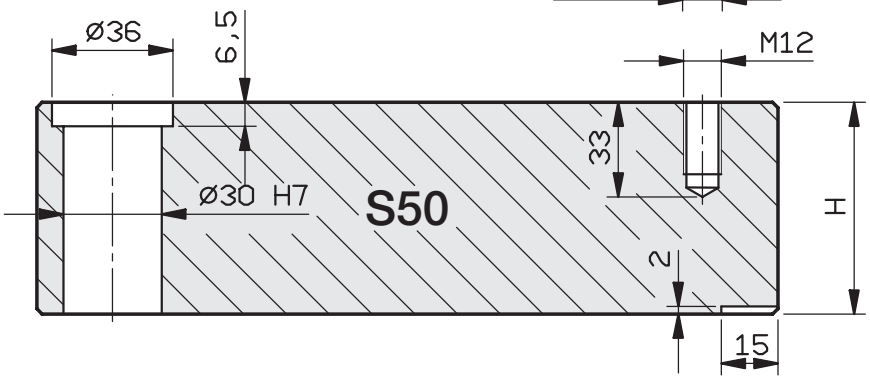

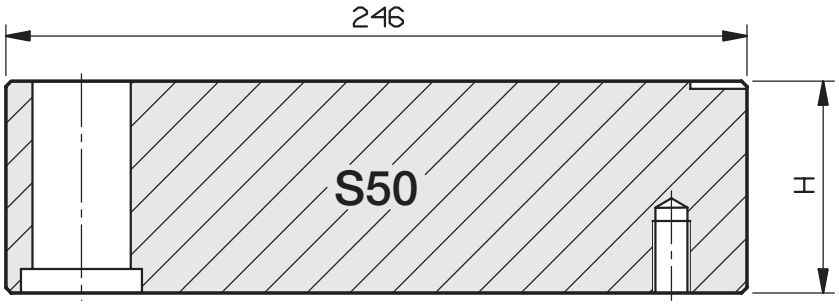

27	1730 - 2738
36	
46	
56	
66	
76	
96	

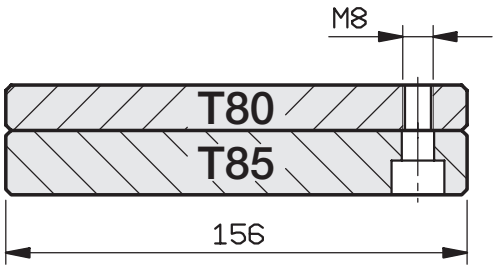

17	1730
22	

56	1730
76	
96	

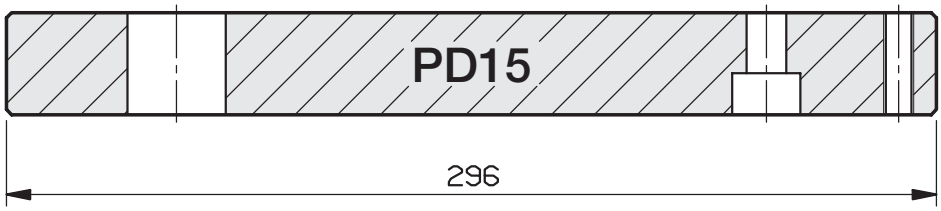

27	1730

via Watt 1/1 - 41012 Carpi (Mo) - Tel. 059 643050 - E-mail: info@ca-be.it

246 x 346

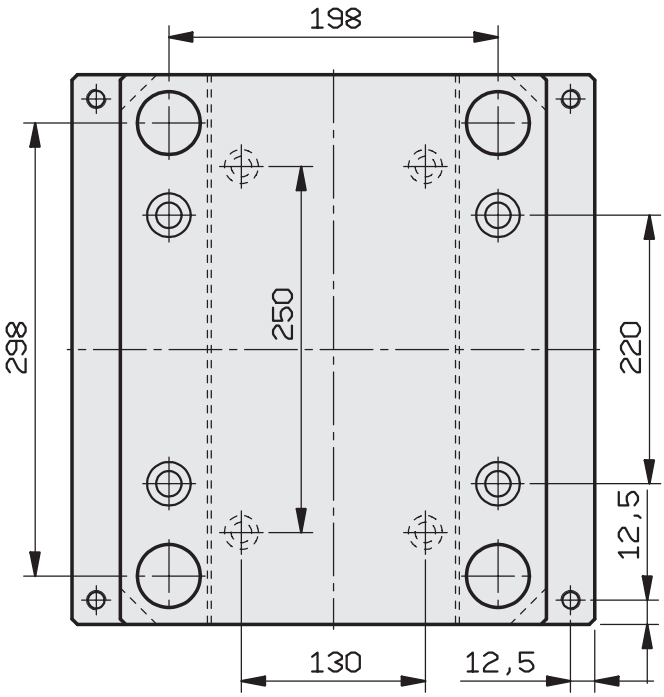

246 x 396

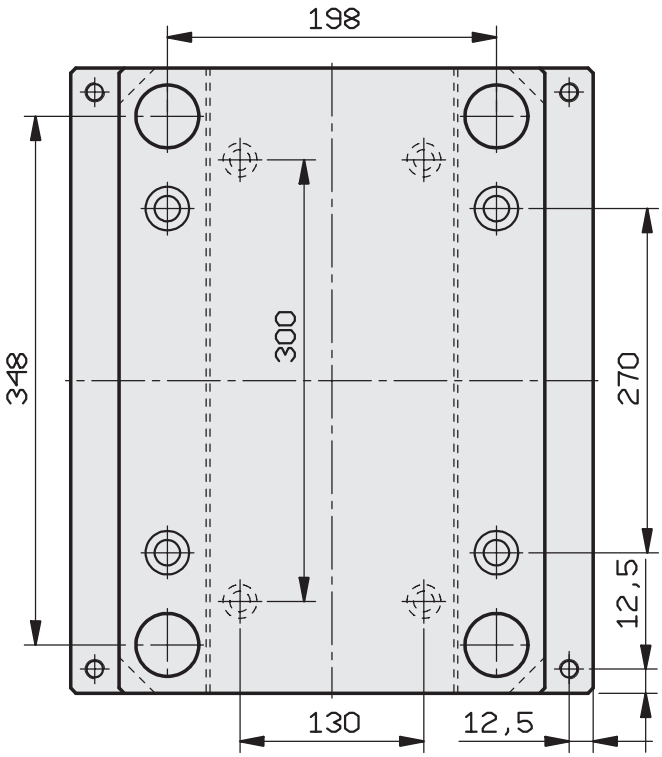

246 x 446

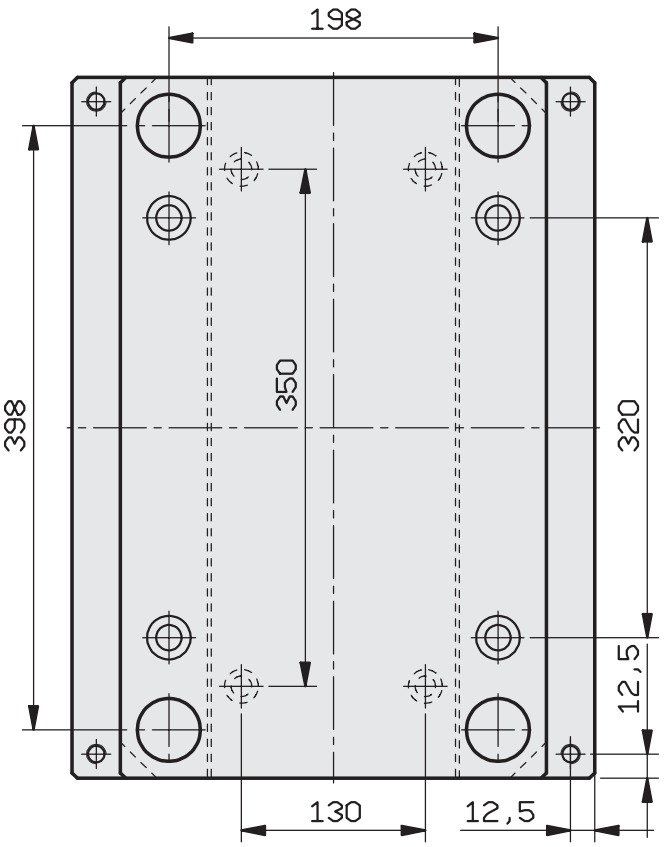

246 x 496

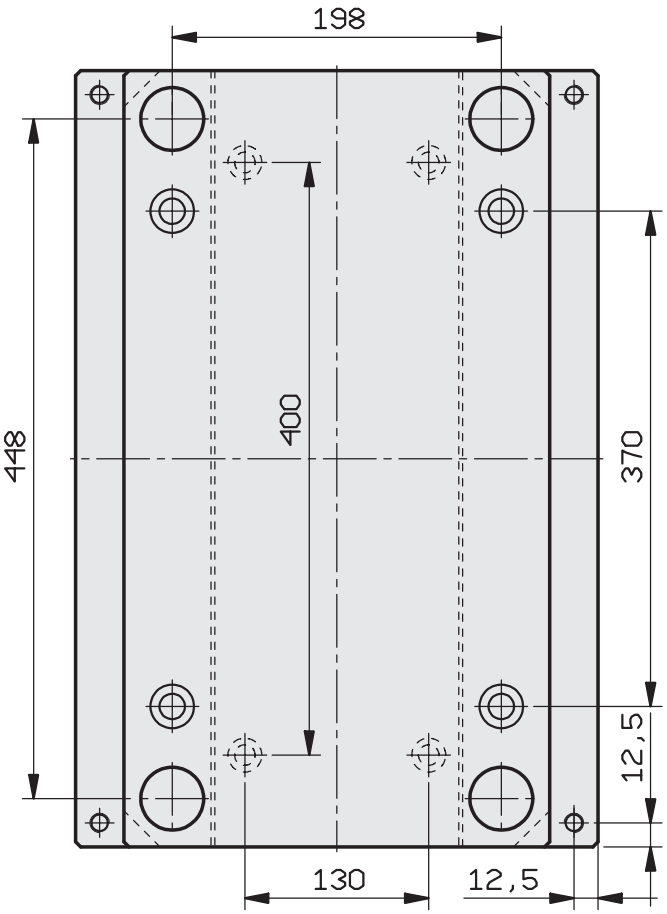

STANDARD PLATES

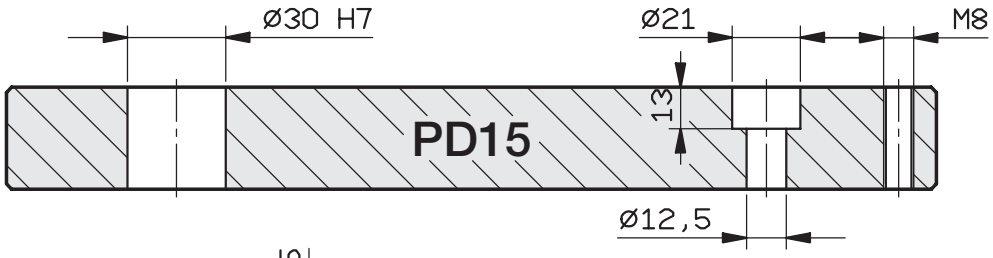

36	1730

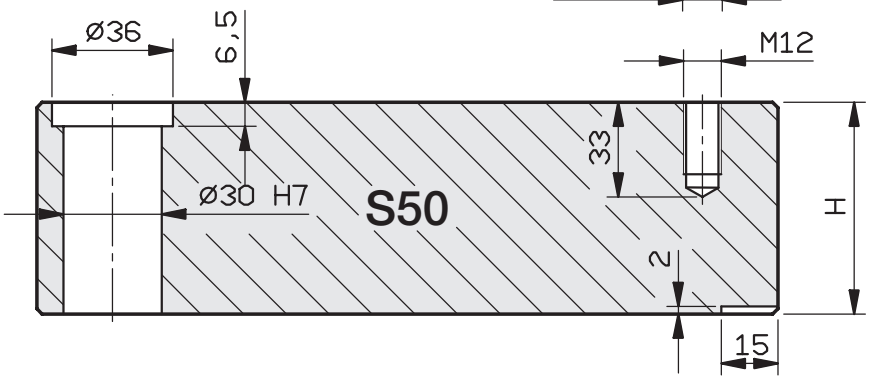

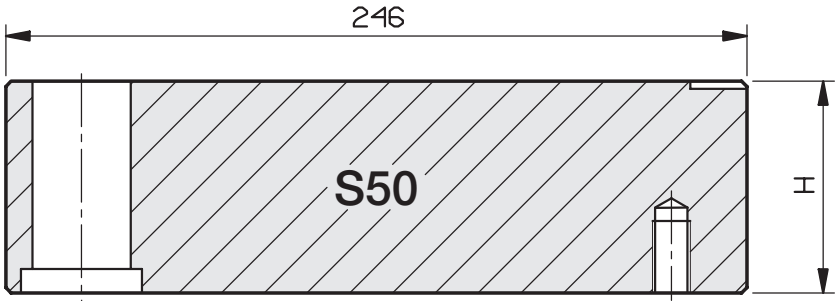

27	1730 - 2738
36	
46	
56	
66	
76	
96	

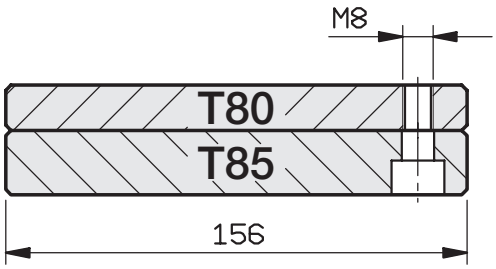

22	1730
27	

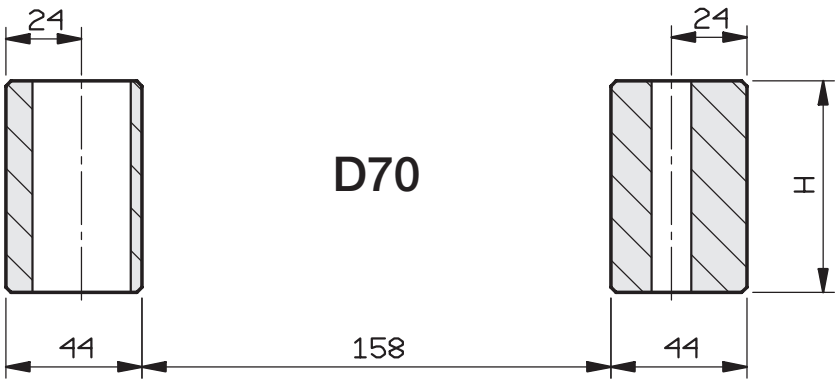

56	1730
76	
96	

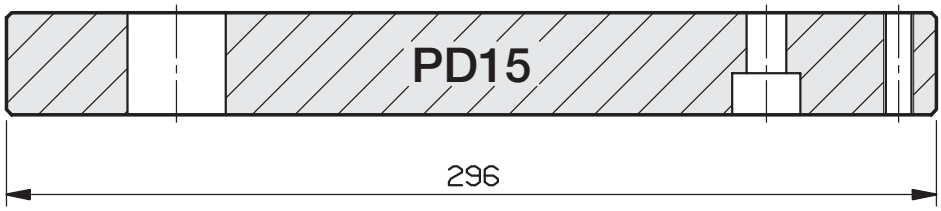

36	1730

via Watt 1/1 - 41012 Carpi (Mo) - Tel. 059 643050 - E-mail: info@ca-be.it

246 x 546

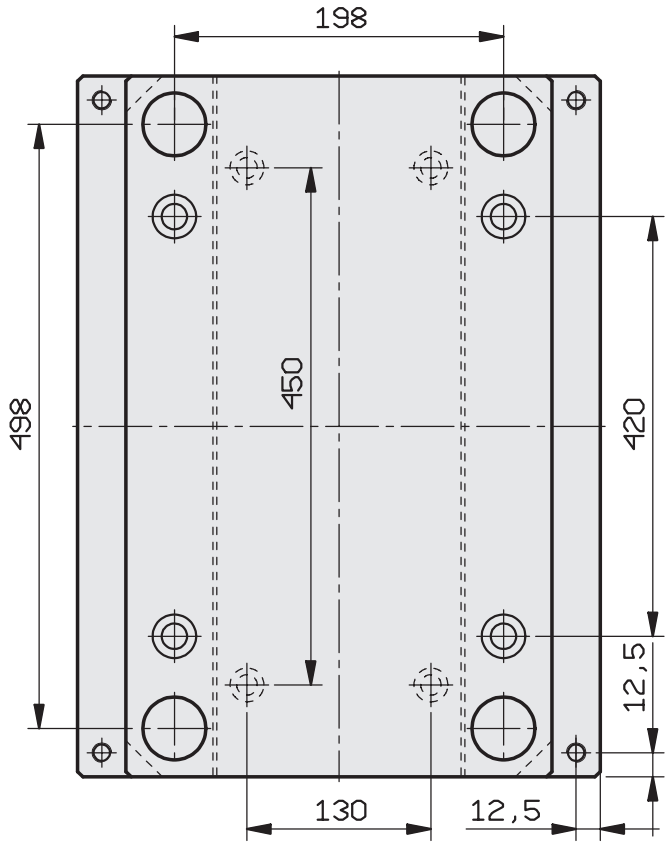

246 x 596

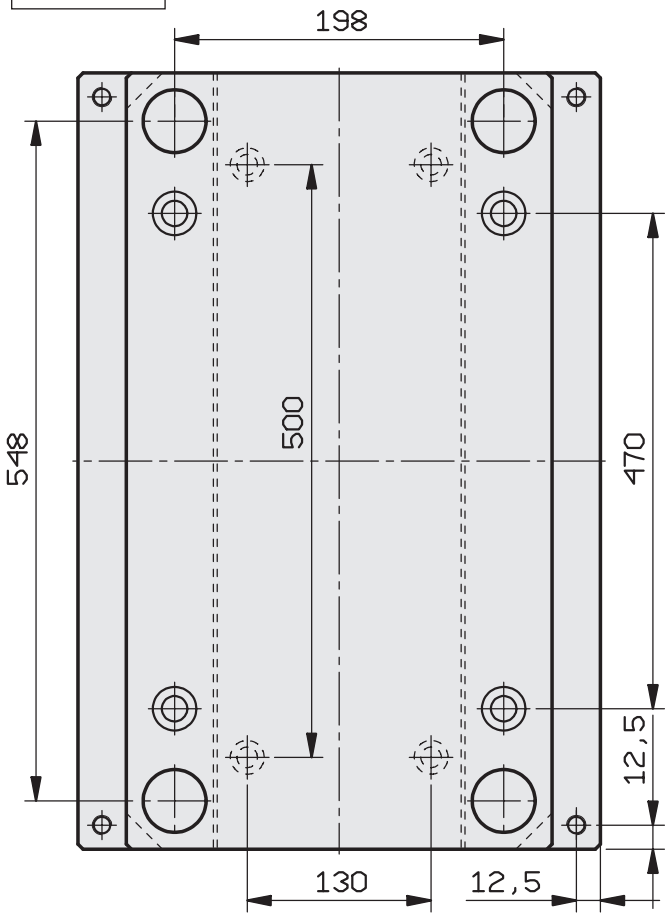

STANDARD PLATES

27	1730

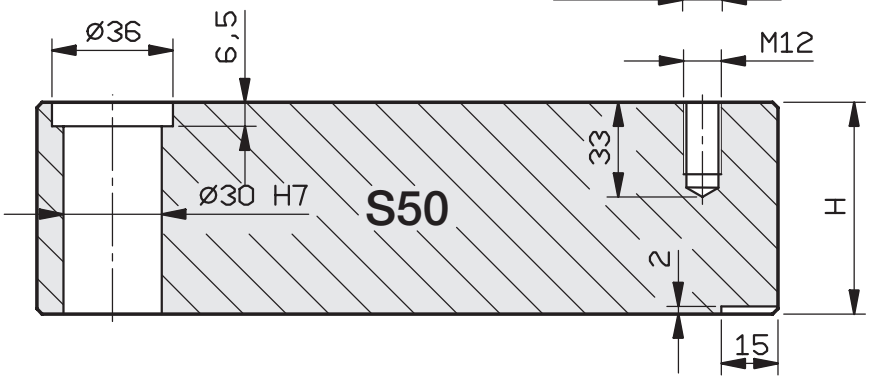

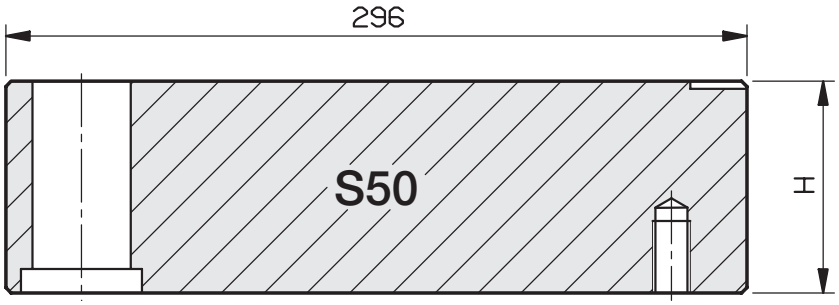

36	1730 - 2738
46	
56	
66	
76	
96	
116	

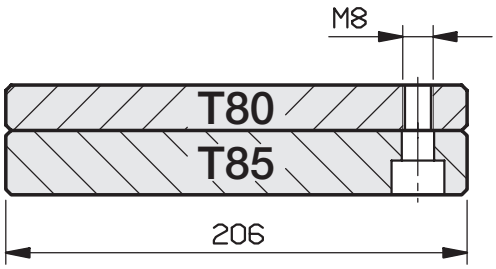

12	1730
22	

56	1730
76	
96	
116	

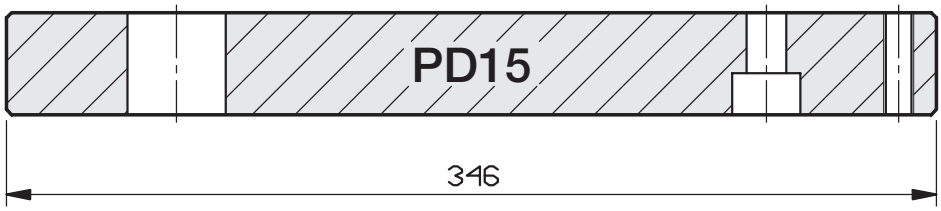

27	1730

via Watt 1/1 - 41012 Carpi (Mo) - Tel. 059 643050 - E-mail: info@ca-be.it

296 x 296

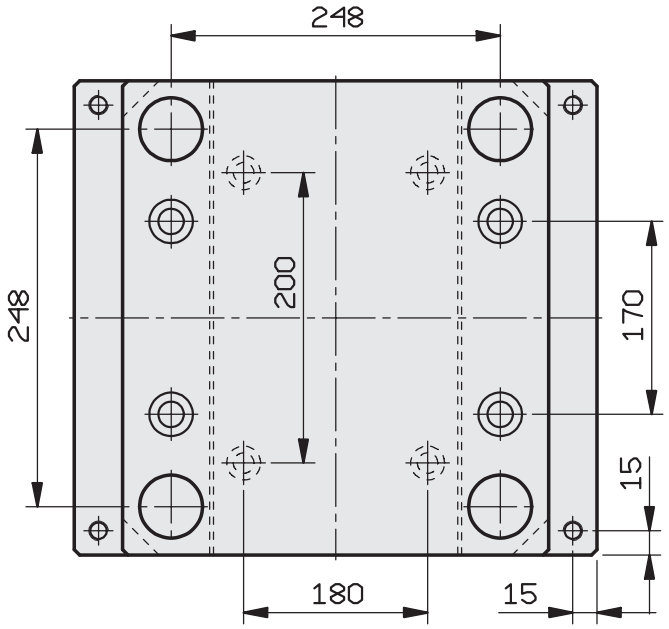

STANDARD PLATES

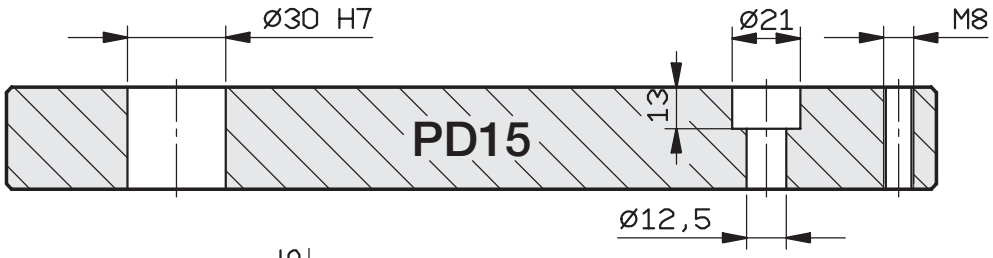

27	1730

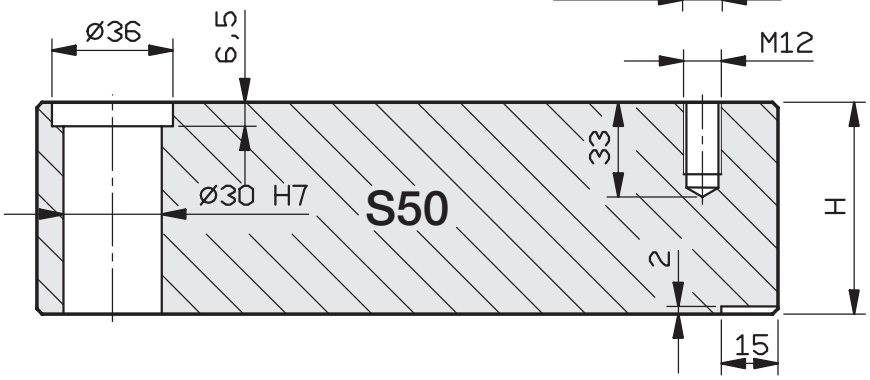

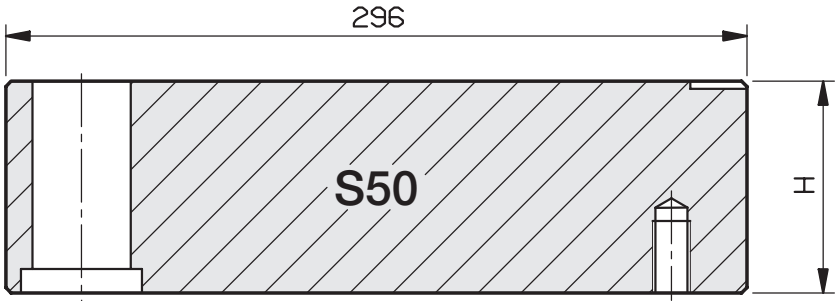

36	1730 - 2738
46	
56	
66	
76	
96	
116	

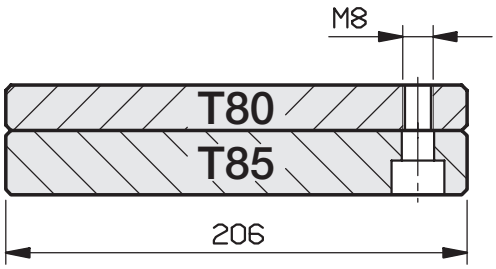

17	1730
22	

56	1730
76	
96	
116	

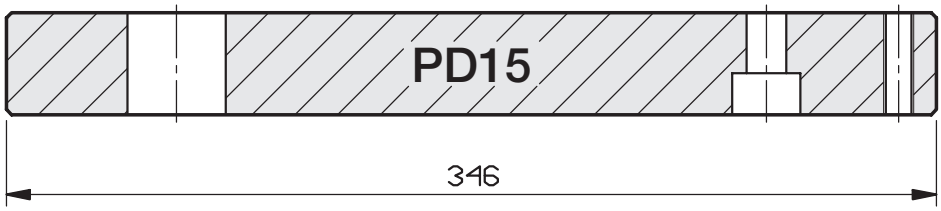

27	1730

via Watt 1/1 - 41012 Carpi (Mo) - Tel. 059 643050 - E-mail: info@ca-be.it

296 x 346

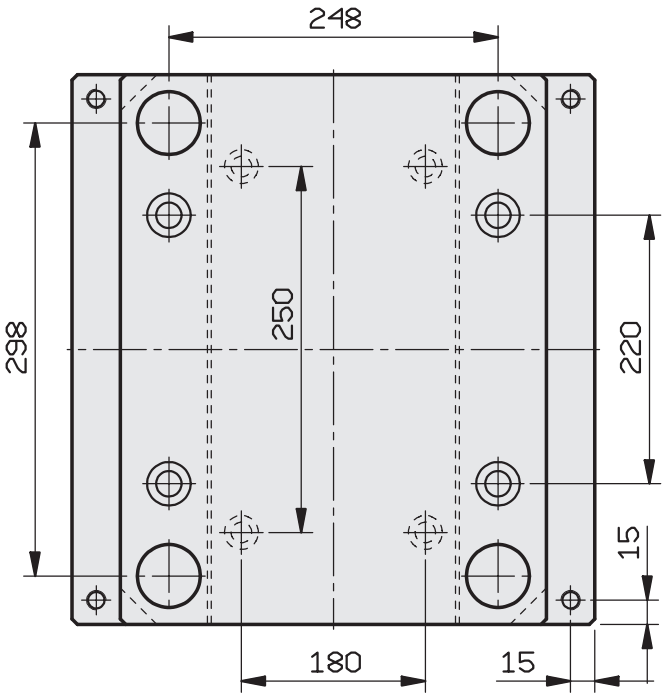

296 x 396

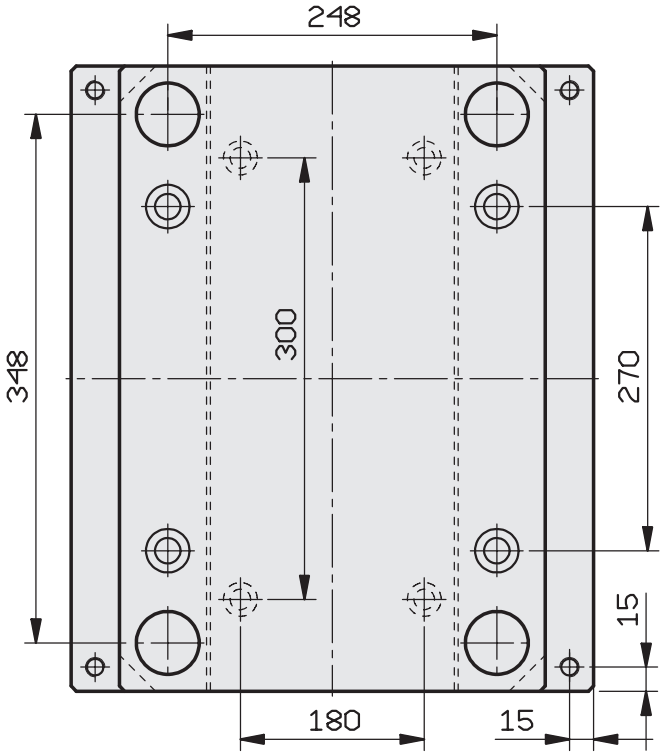

296 x 446

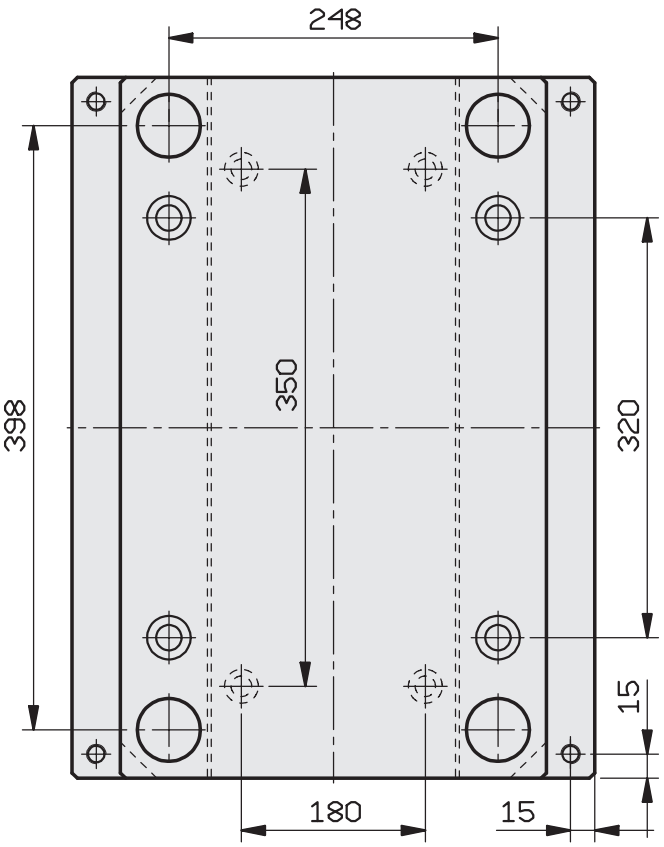

296 x 496

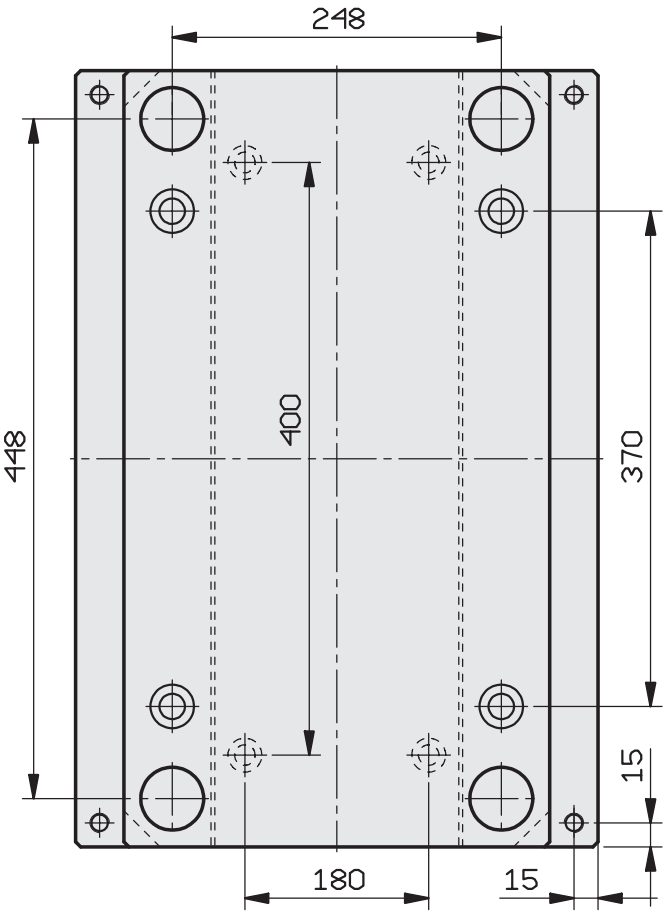

STANDARD PLATES

36	1730

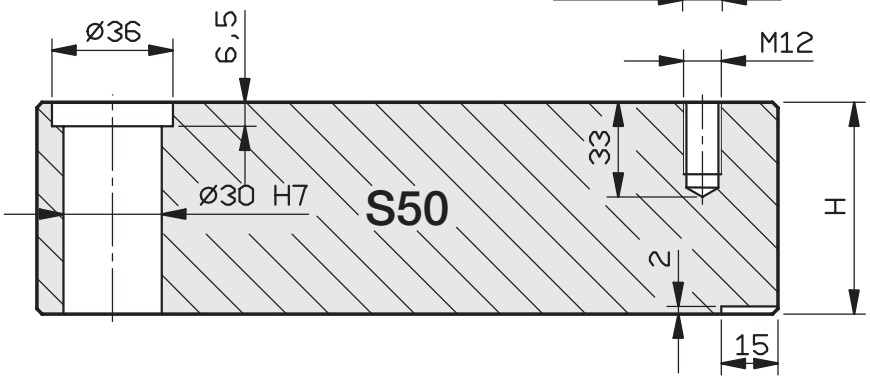

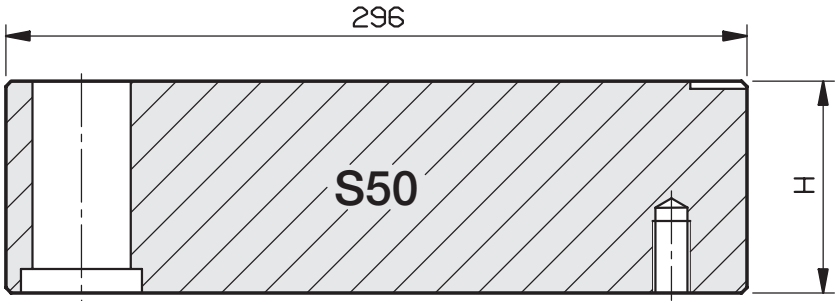

36	1730 - 2738
46	
56	
66	
76	
96	
116	

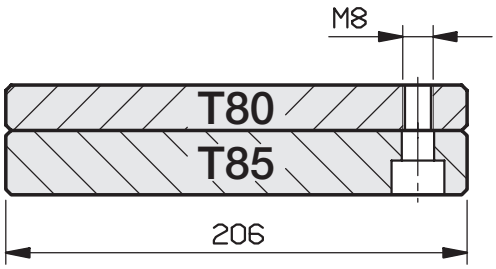

22	1730
27	

56	1730
76	
96	
116	

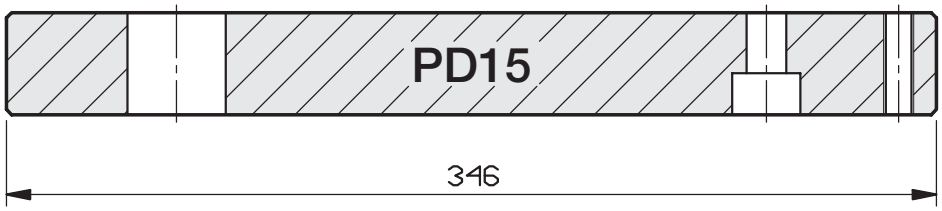

36	1730

via Watt 1/1 - 41012 Carpi (Mo) - Tel. 059 643050 - E-mail: info@ca-be.it

296 x 546

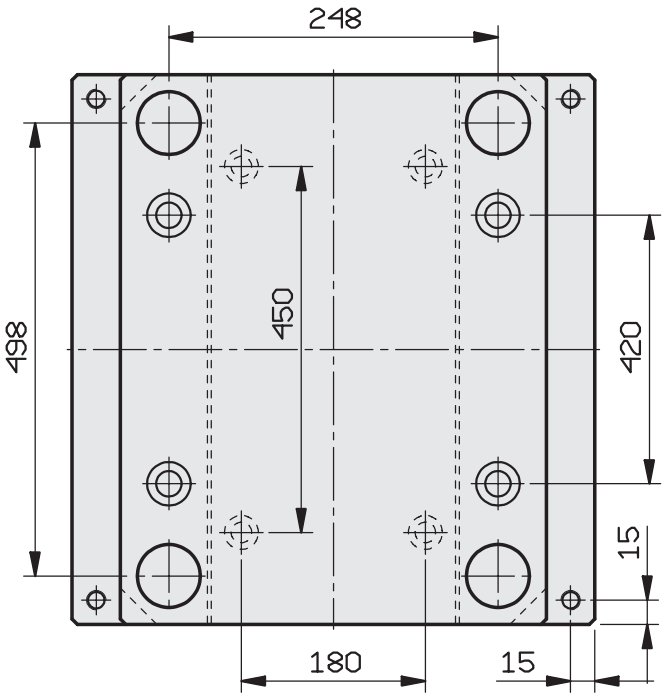

296 x 596

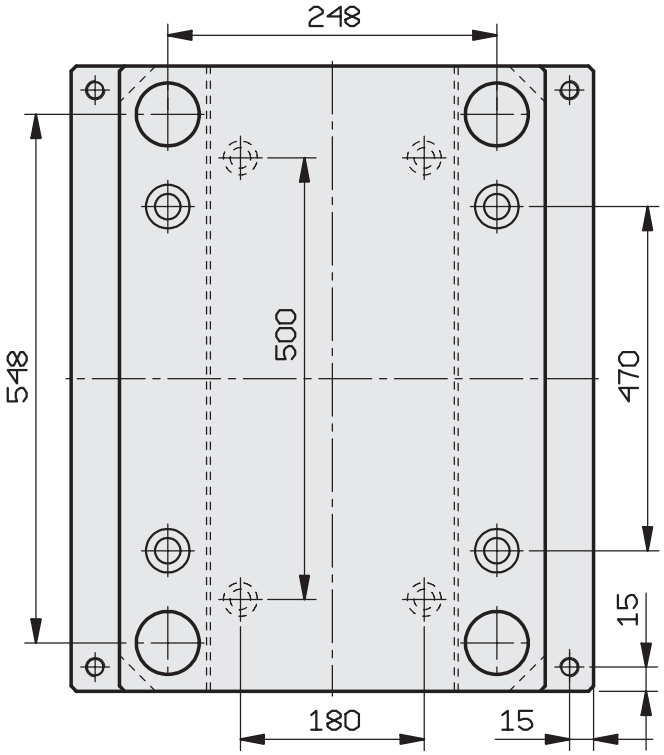

296 x 646

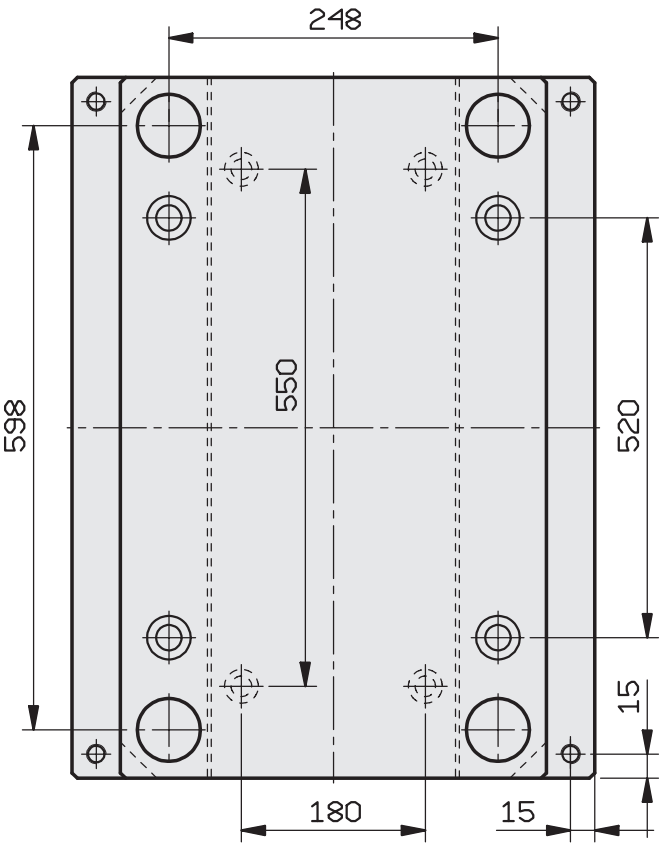

296 x 696

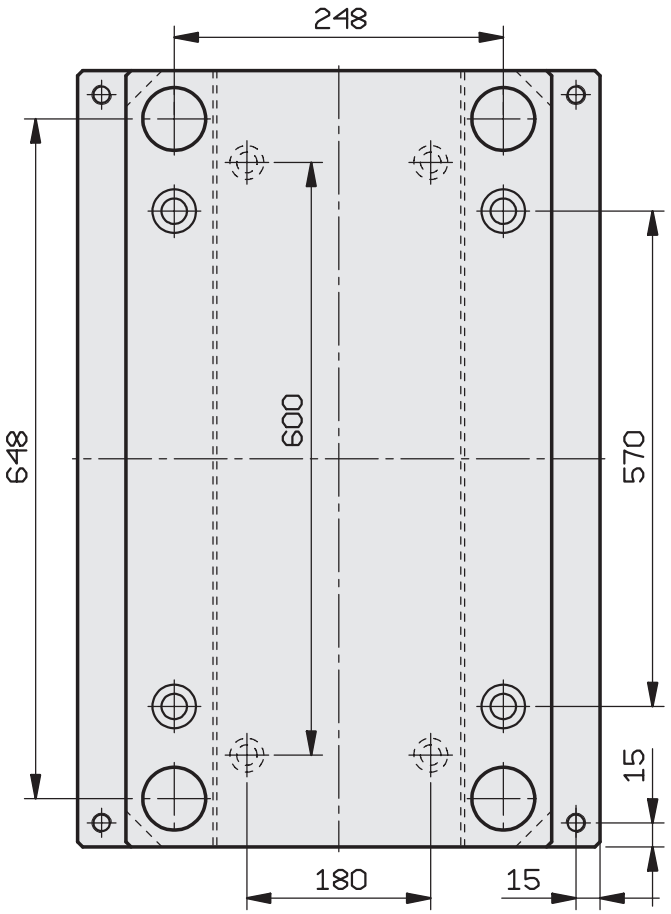

STANDARD PLATES

27	1730

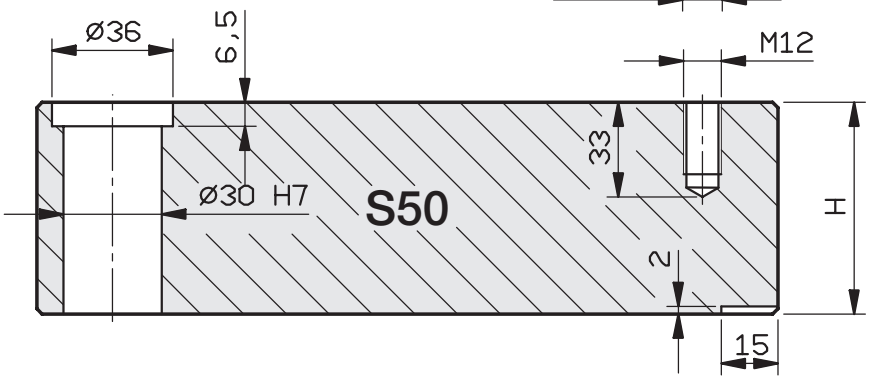

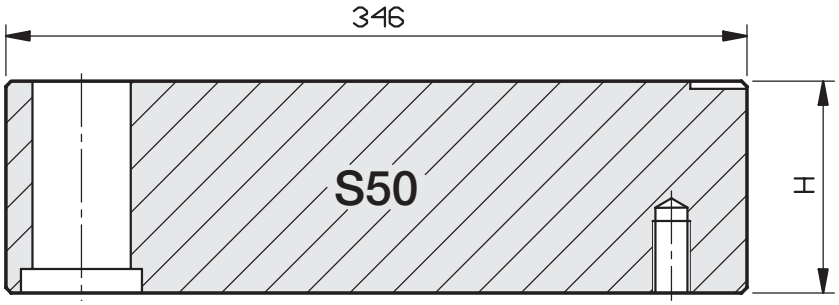

36	1730 - 2738
46	
56	
66	
76	
96	
116	

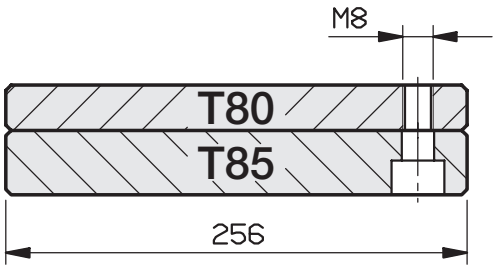

17	1730
22	

56	1730
76	
96	
116	

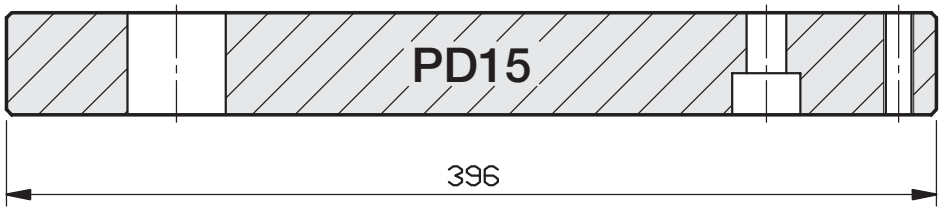

27	1730

via Watt 1/1 - 41012 Carpi (Mo) - Tel. 059 643050 - E-mail: info@ca-be.it

346 x 346

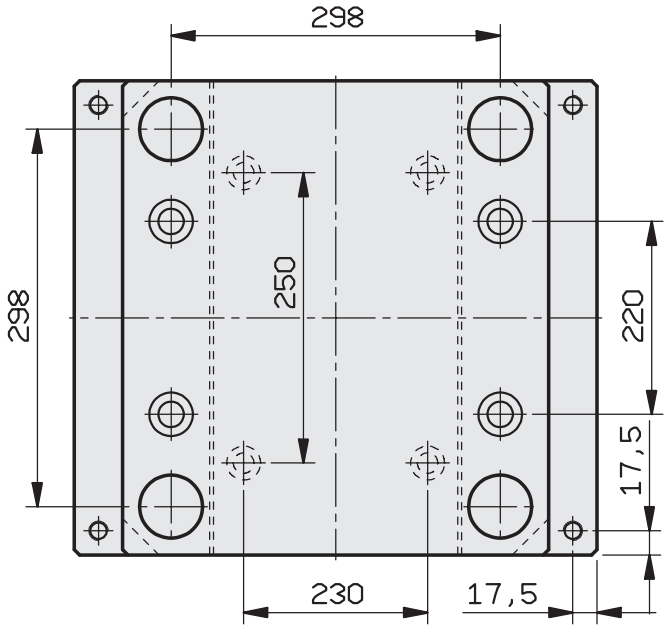

STANDARD PLATES

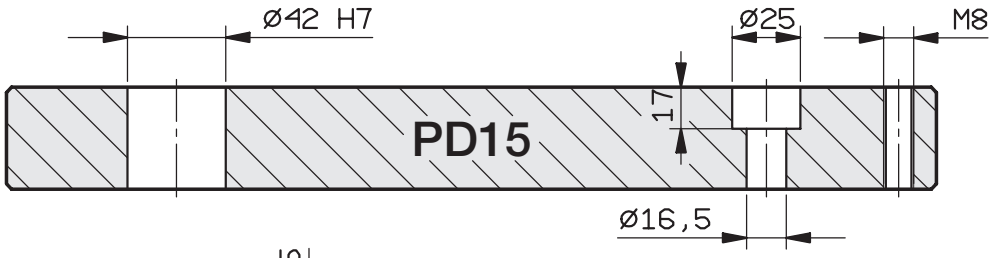

27	1730

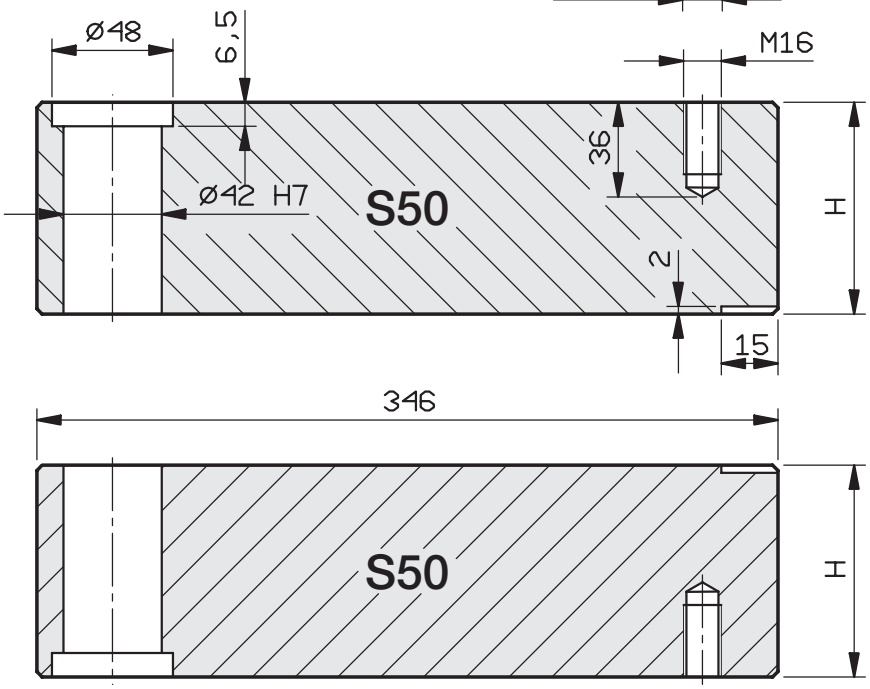

36	1730 - 2738
46	
56	
66	
76	
96	
116	

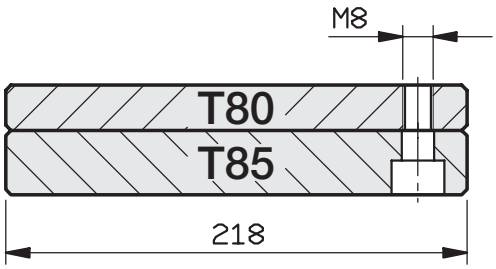

17	1730
22	

56	1730
76	
96	
116	

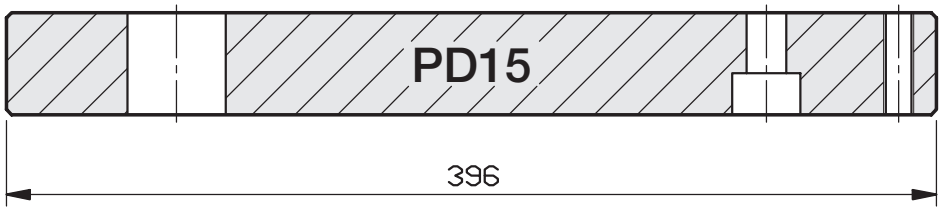

27	1730

via Watt 1/1 - 41012 Carpi (Mo) - Tel. 059 643050 - E-mail: info@ca-be.it

346 x 396

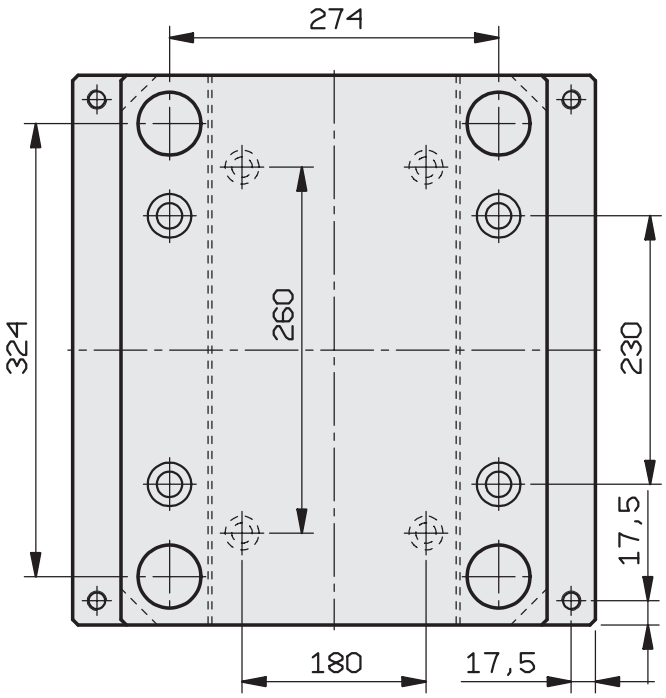

346 x 446

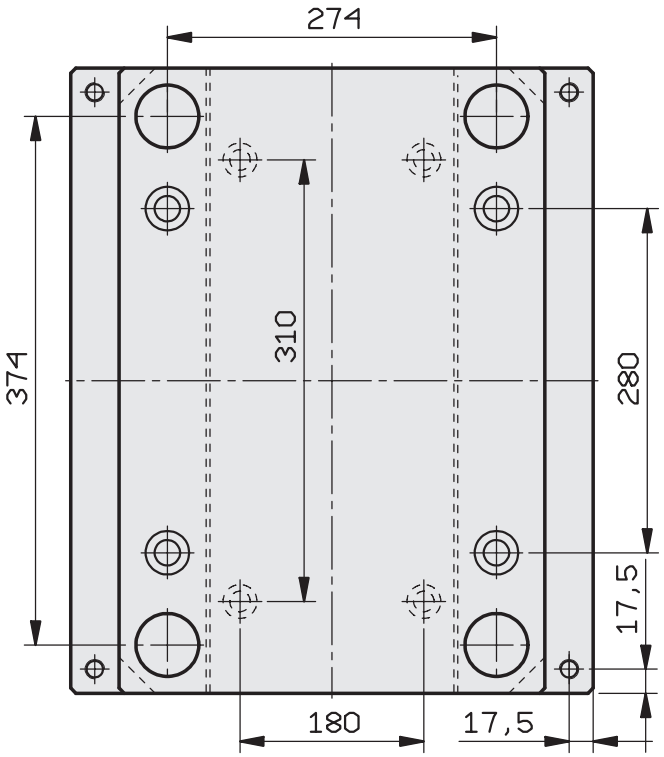

346 x 496

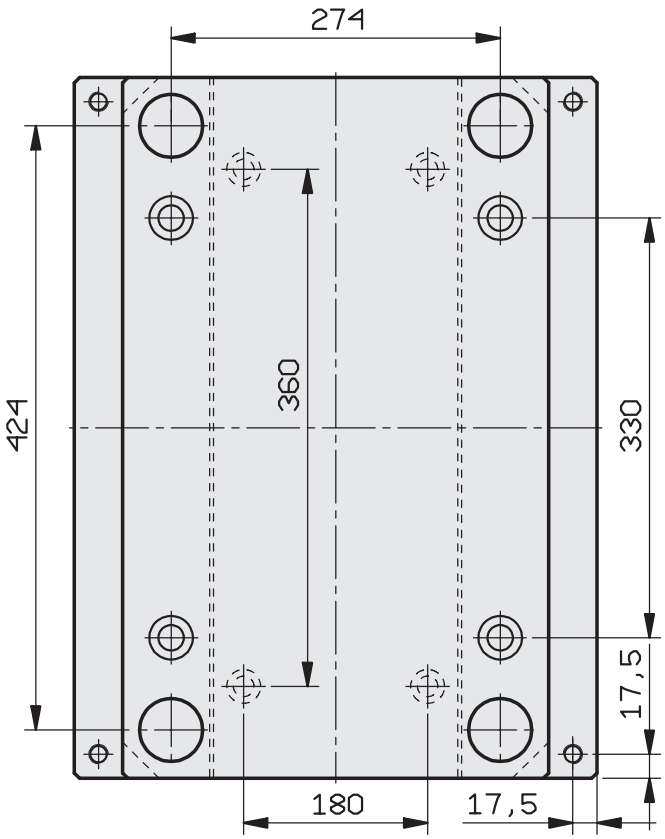

STANDARD PLATES

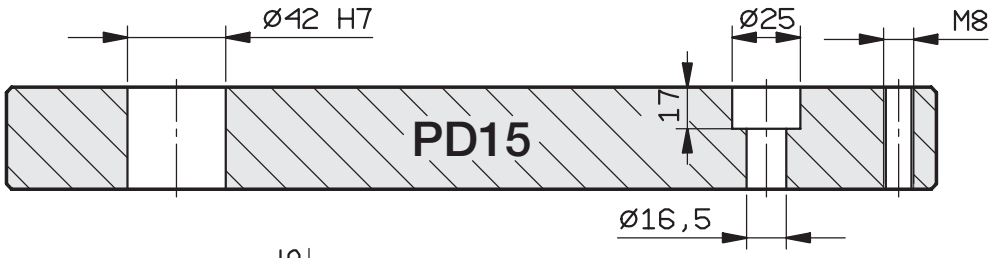

36	1730

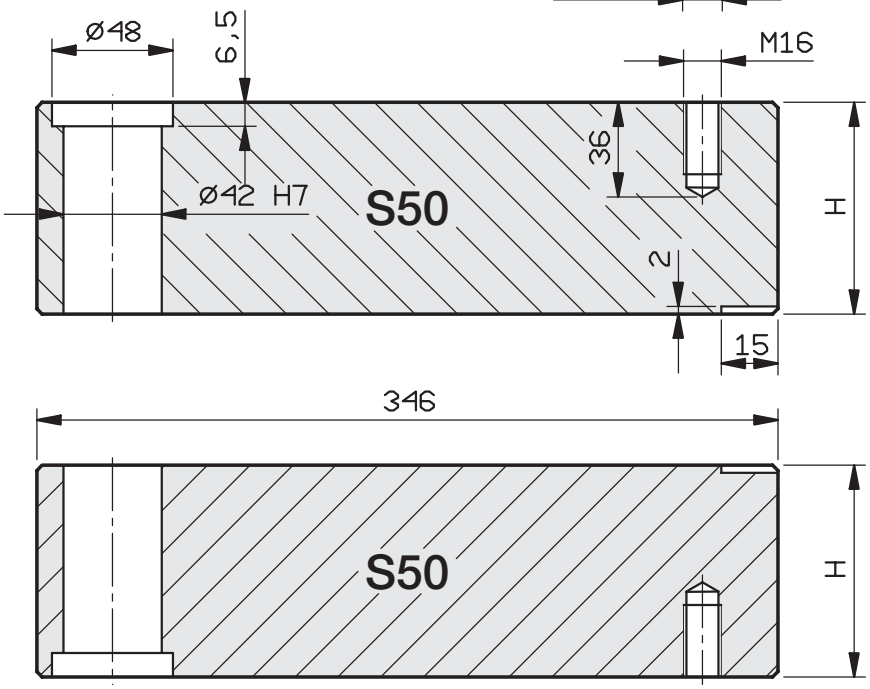

36	1730 - 2738
46	
56	
66	
76	
96	
116	

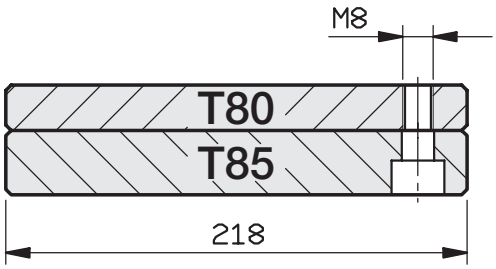

22	1730
27	

56	1730
76	
96	
116	

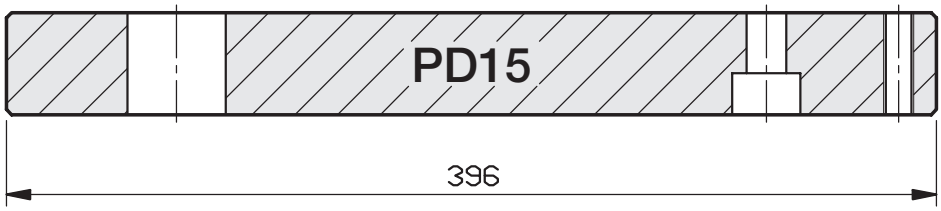

36	1730

via Watt 1/1 - 41012 Carpi (Mo) - Tel. 059 643050 - E-mail: info@ca-be.it

346 x 546

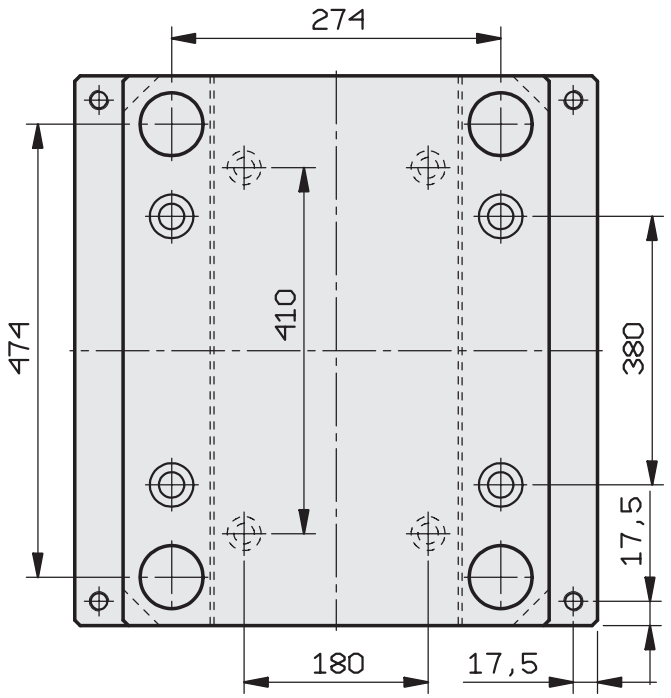

346 x 596

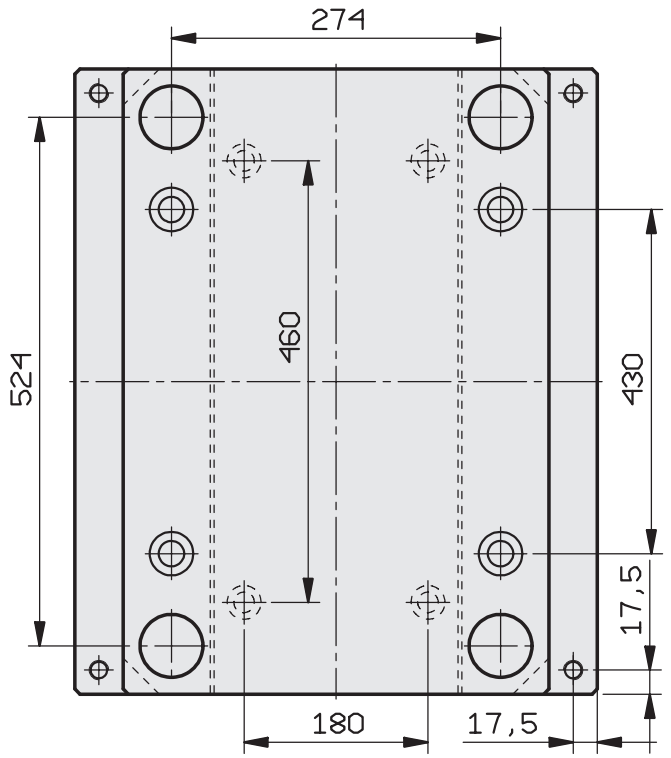

STANDARD PLATES

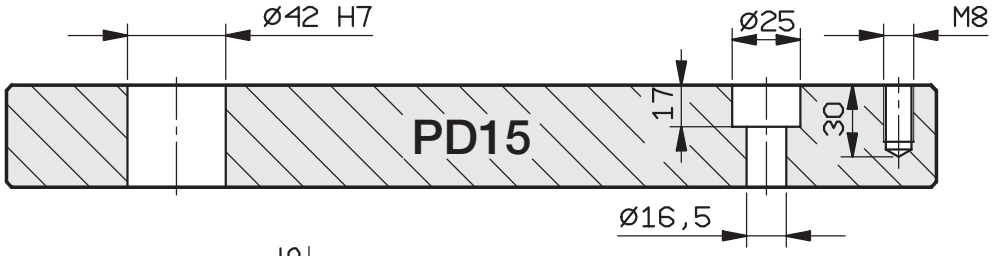

46	1730

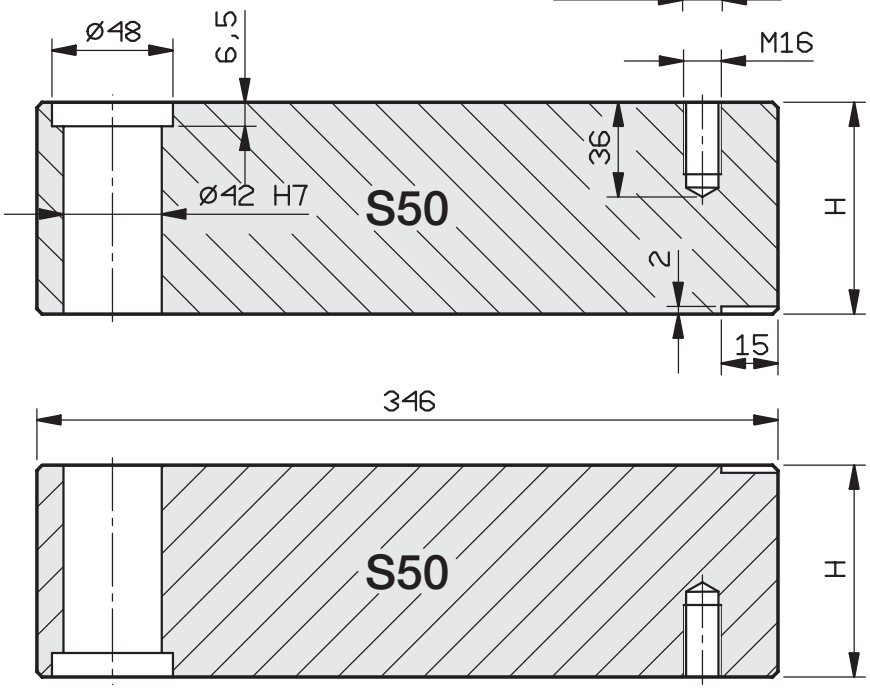

36	1730 - 2738
46	
56	
66	
76	
96	
116	

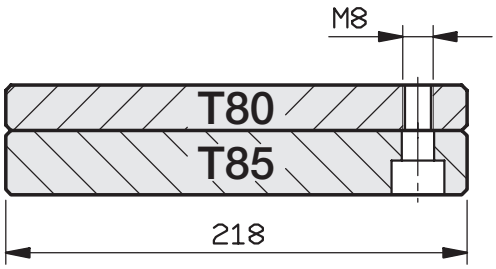

27	1730
36	

56	1730
76	
96	
116	

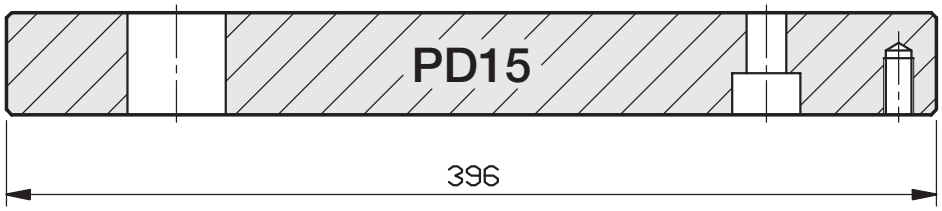

46	1730

via Watt 1/1 - 41012 Carpi (Mo) - Tel. 059 643050 - E-mail: info@ca-be.it

346 x 646

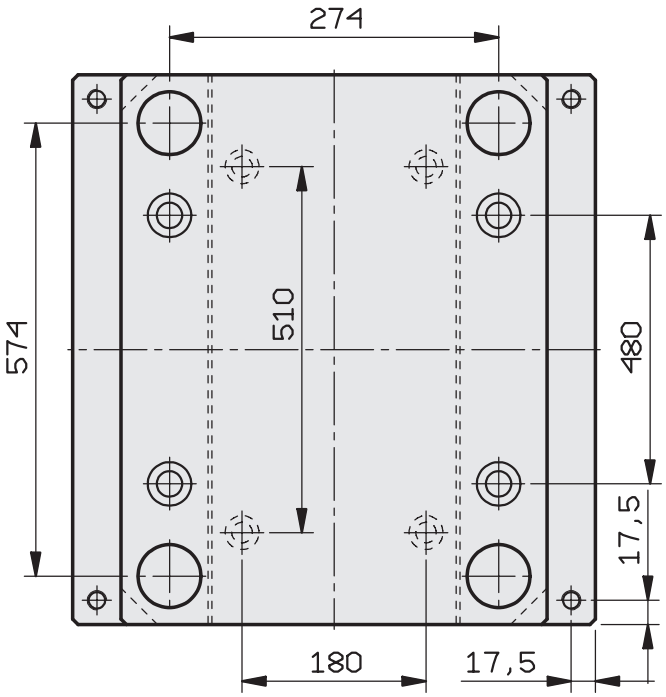

346 x 696

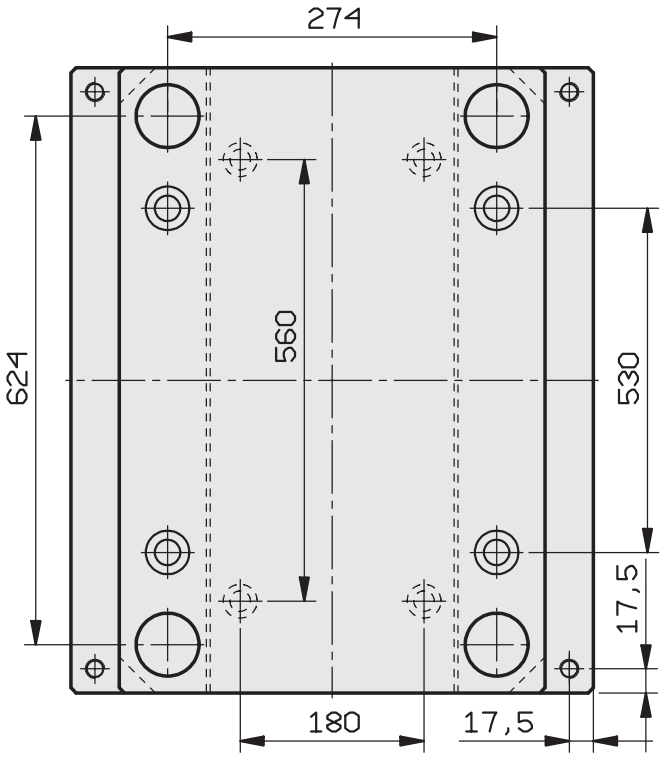

346 x 796

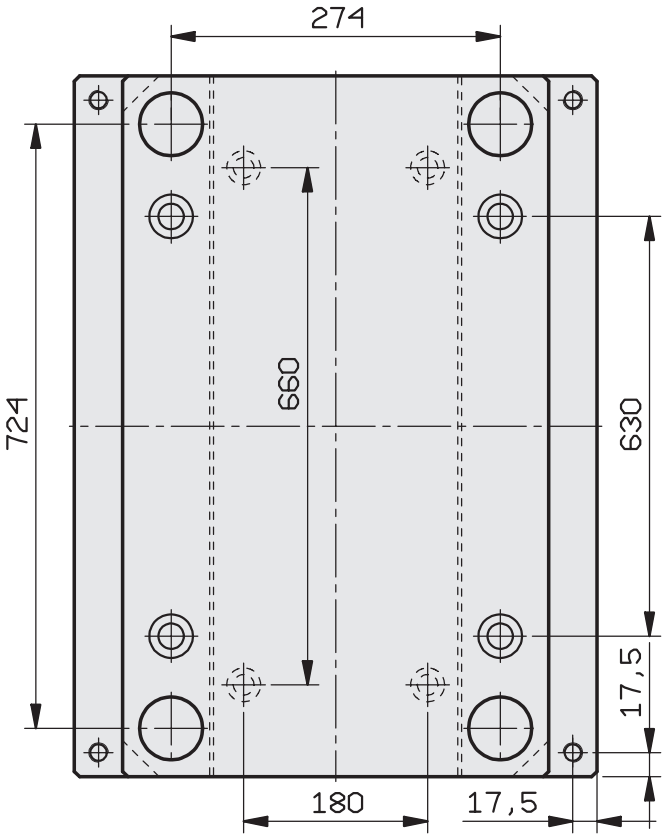

STANDARD PLATES

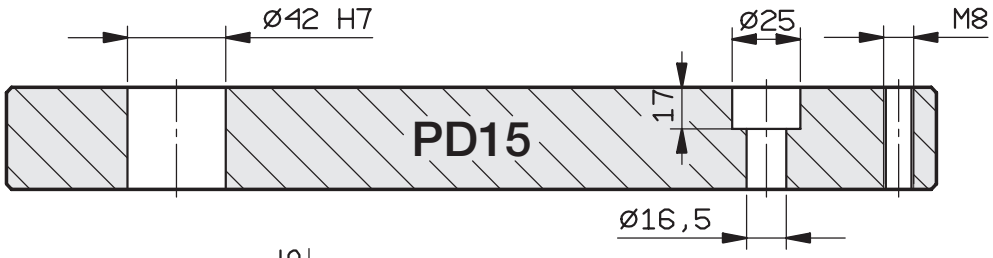

36	1730

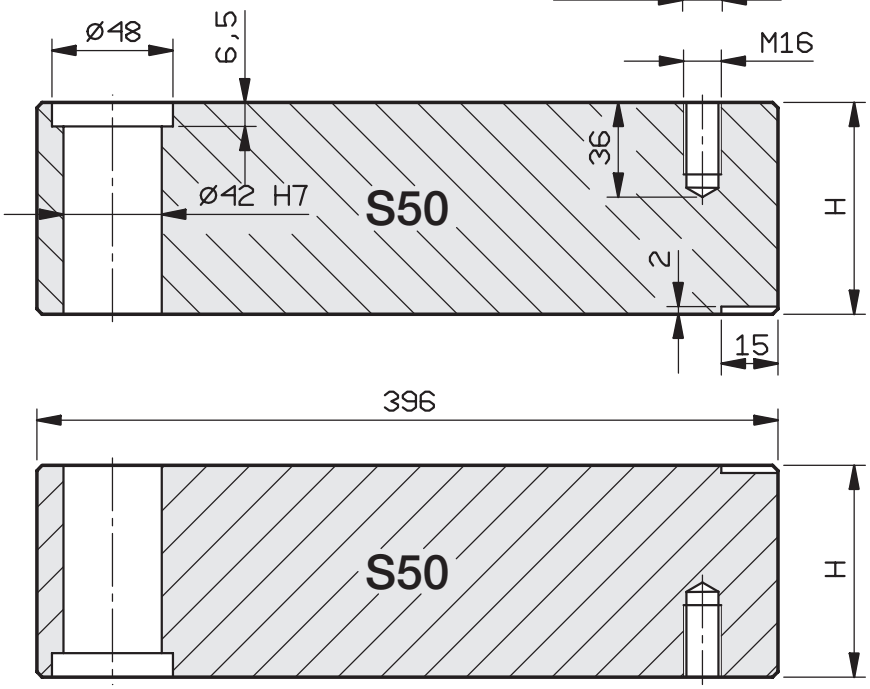

36	1730 - 2738
46	
56	
66	
76	
96	
116	
136	
156	

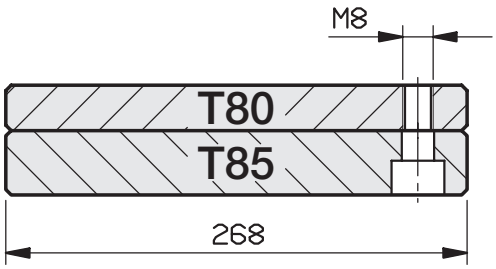

17	1730
22	

76	1730
96	
116	

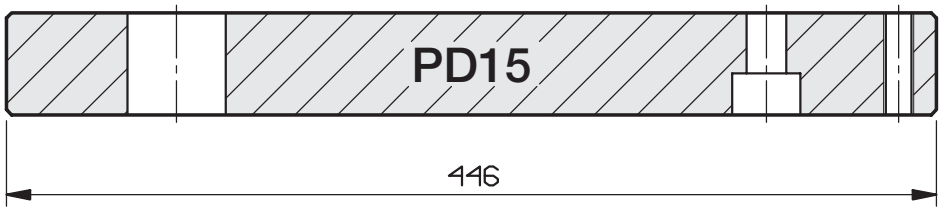

36	1730

via Watt 1/1 - 41012 Carpi (Mo) - Tel. 059 643050 - E-mail: info@ca-be.it

396 x 396

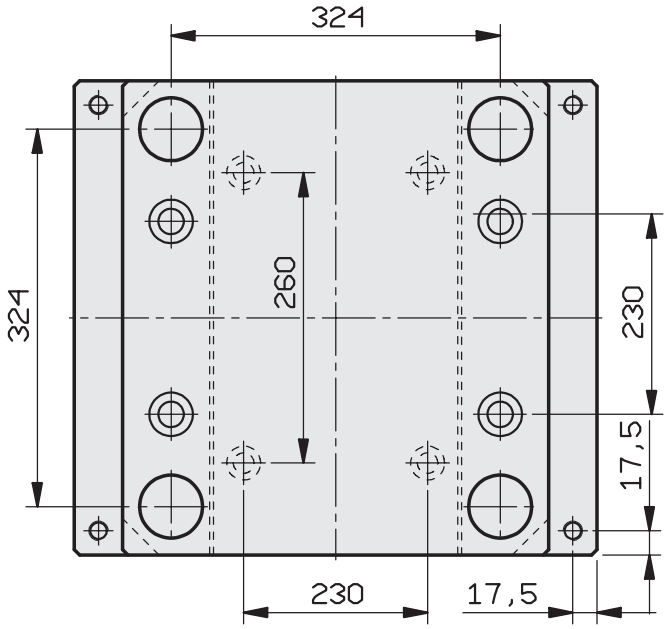

STANDARD PLATES

36	1730

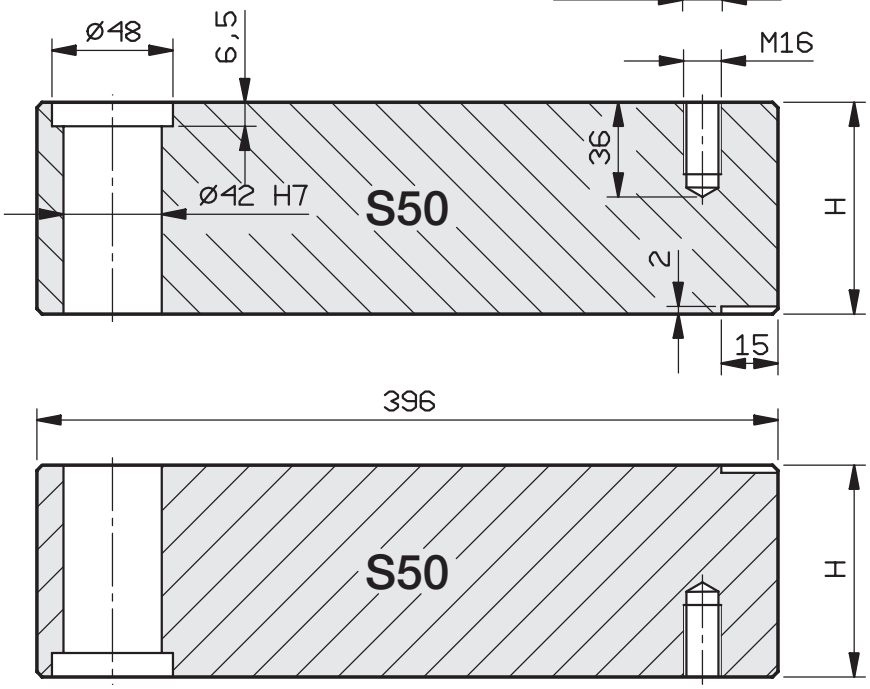

36	1730 - 2738
46	
56	
66	
76	
96	
116	
136	
156	

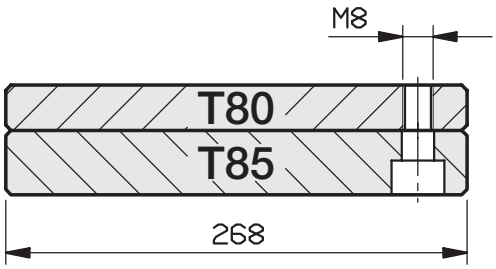

17	1730
27	

76	1730
96	
116	

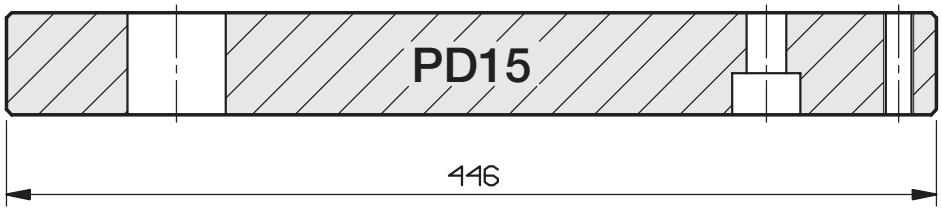

36	1730

via Watt 1/1 - 41012 Carpi (Mo) - Tel. 059 643050 - E-mail: info@ca-be.it

396 x 446

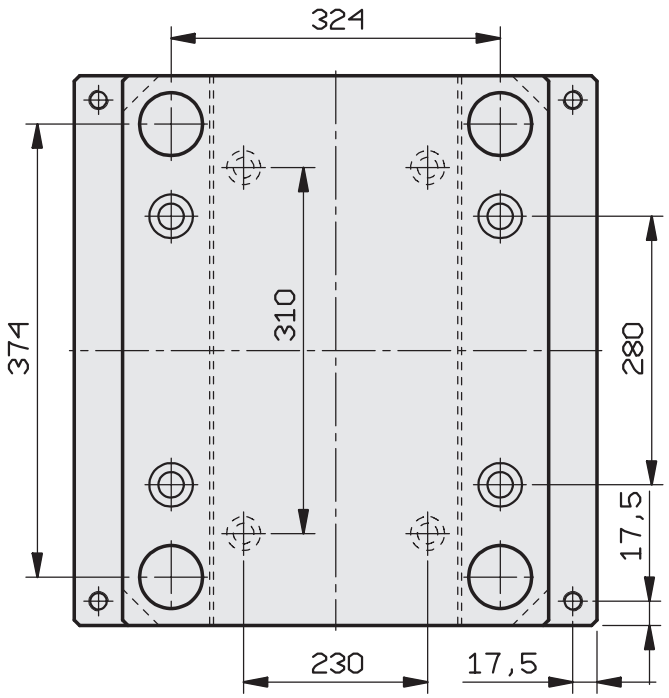

STANDARD PLATES

36	1730

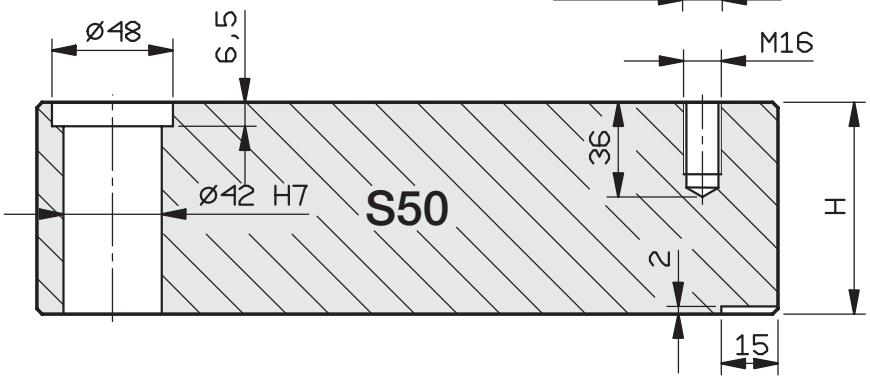

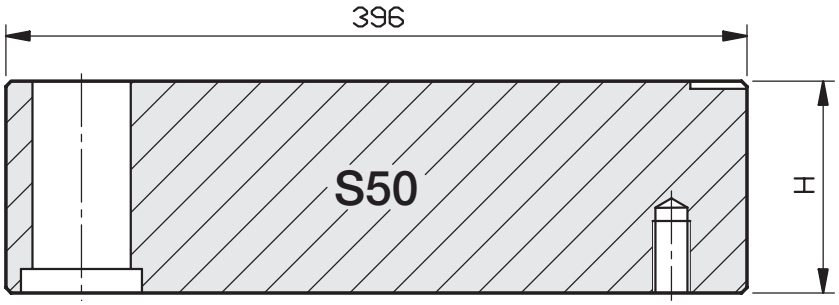

36	1730 - 2738
46	
56	
66	
76	
96	
116	
136	
156	

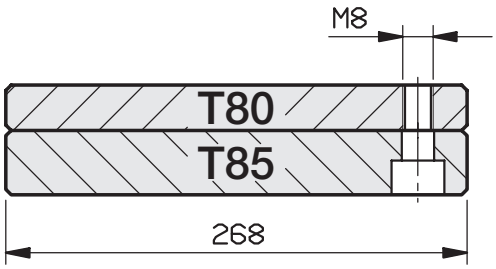

22	1730
27	

76	1730
96	
116	

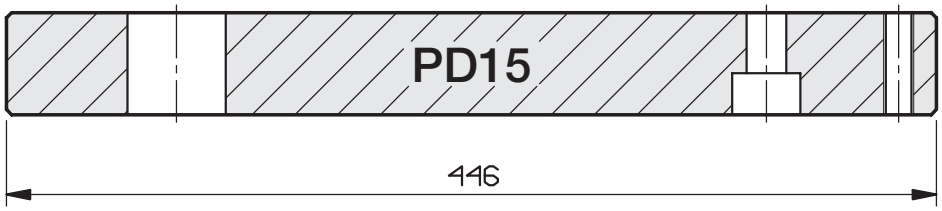

36	1730

via Watt 1/1 - 41012 Carpi (Mo) - Tel. 059 643050 - E-mail: info@ca-be.it

396 x 496

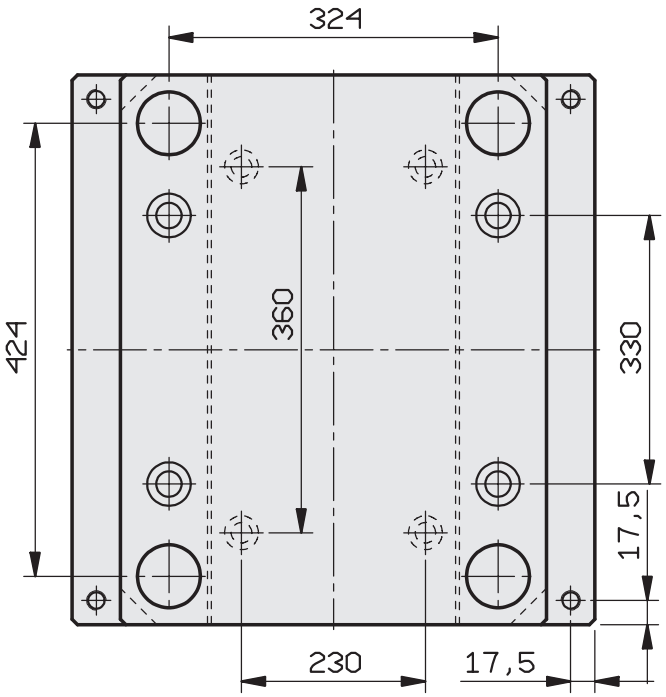

396 x 546

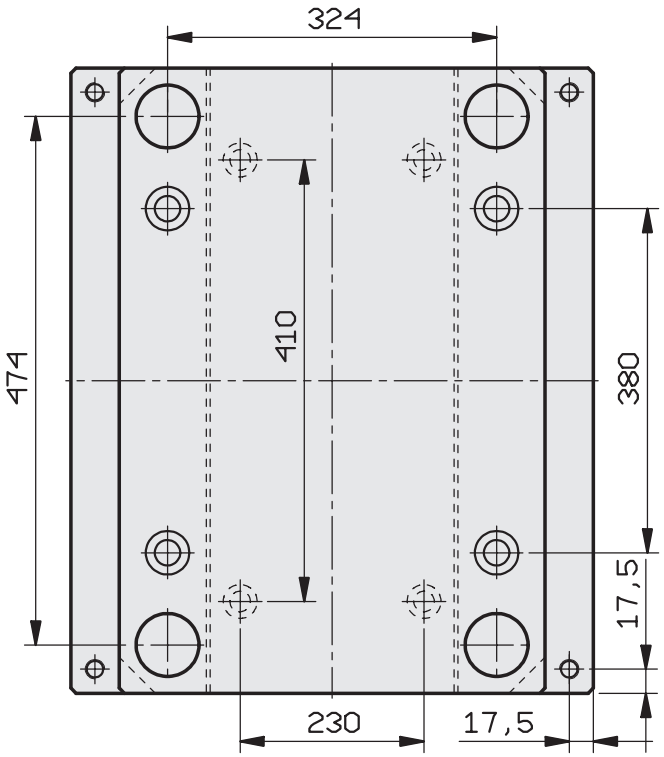

396 x 596

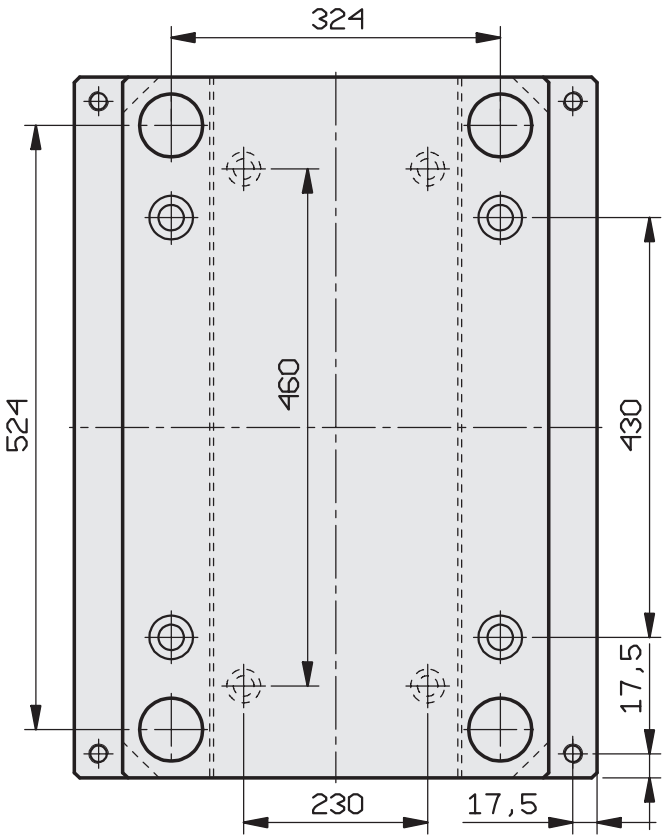

STANDARD PLATES

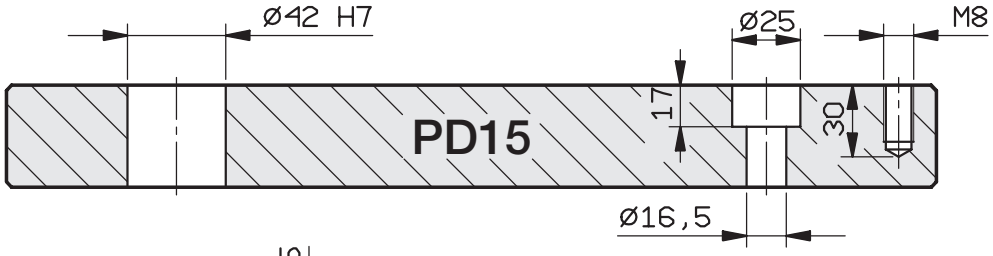

46	1730

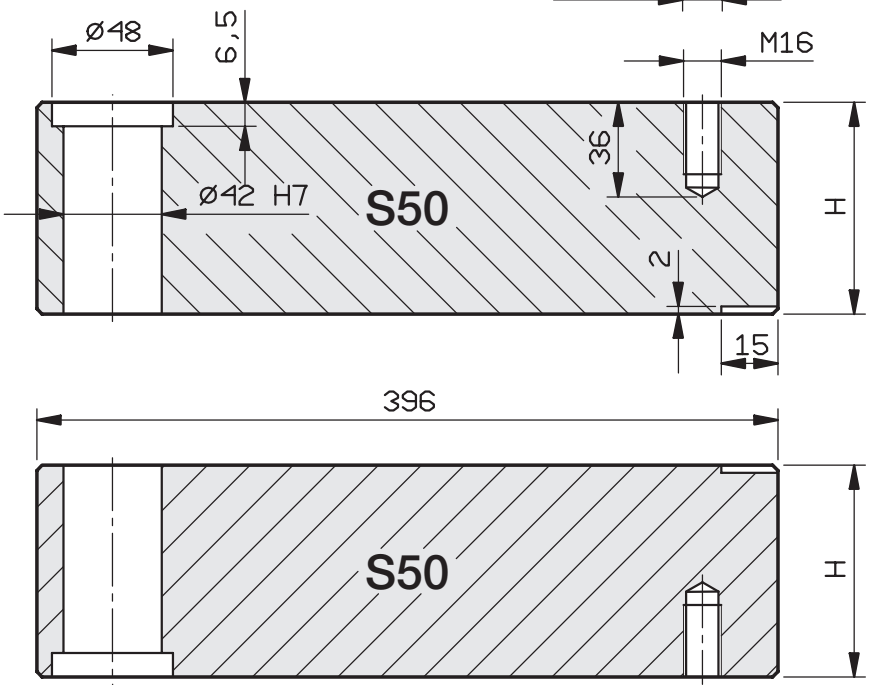

36	1730 - 2738
46	
56	
66	
76	
96	
116	
136	
156	

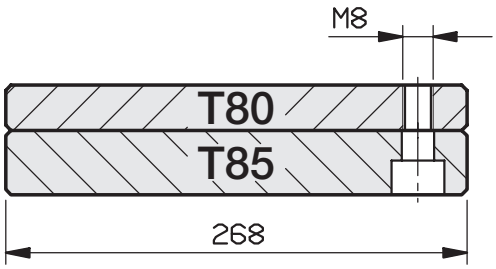

27	1730
36	

76	1730
96	
116	

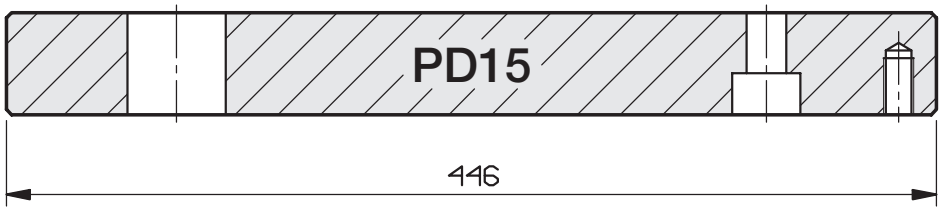

46	1730

via Watt 1/1 - 41012 Carpi (Mo) - Tel. 059 643050 - E-mail: info@ca-be.it

396 x 646

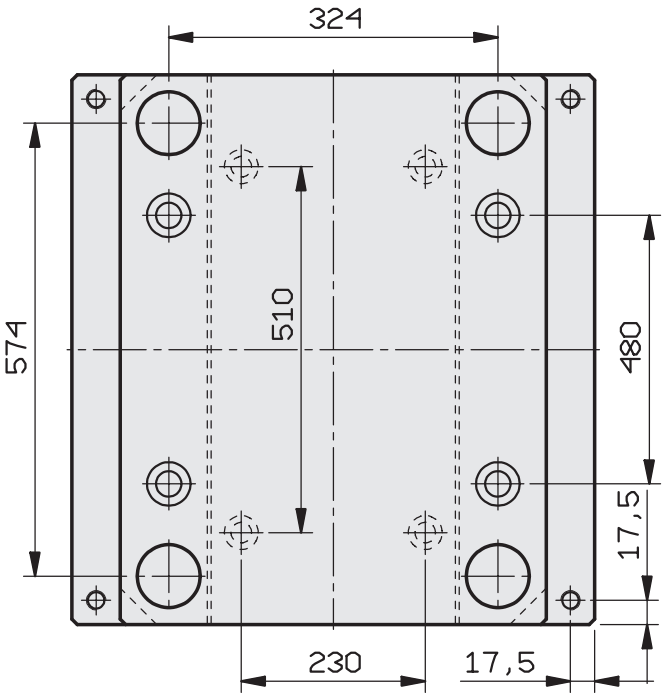

396 x 696

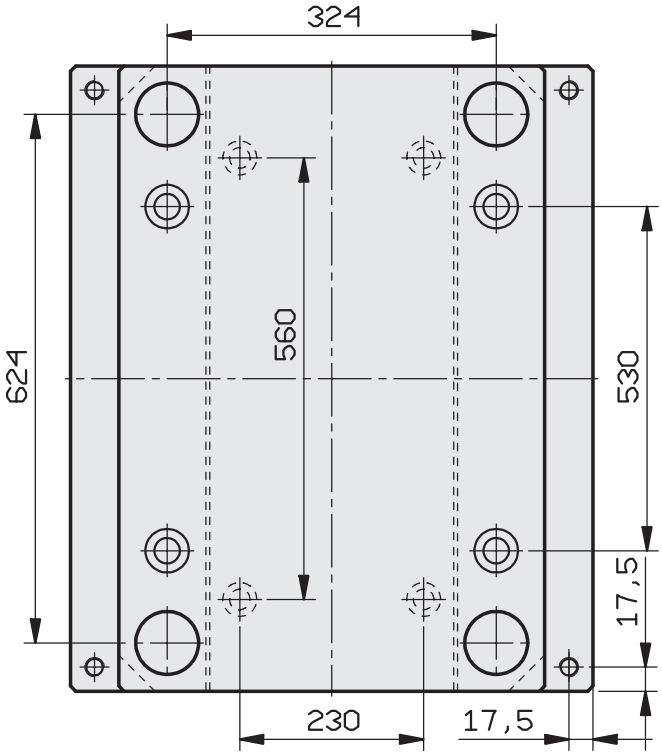

396 x 796

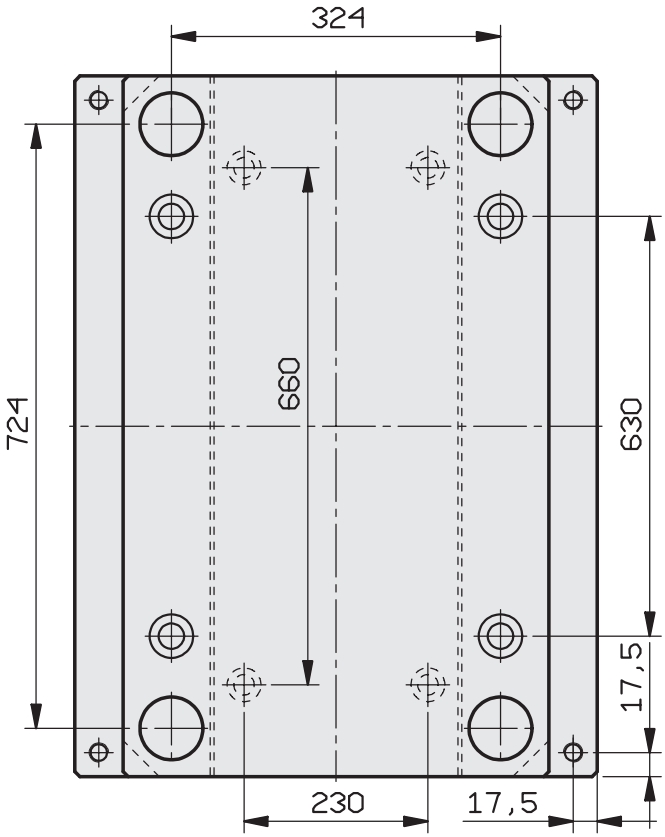

STANDARD PLATES

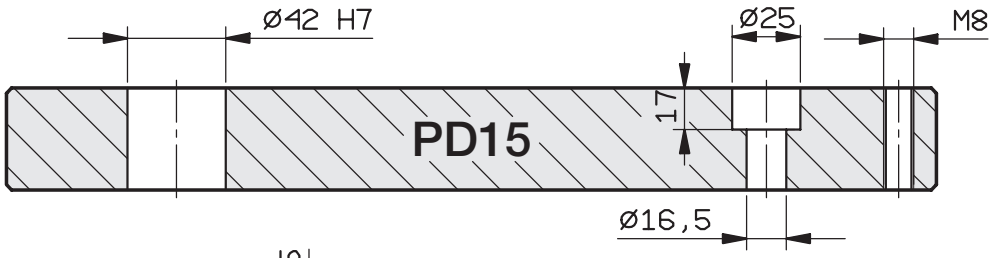

36	1730

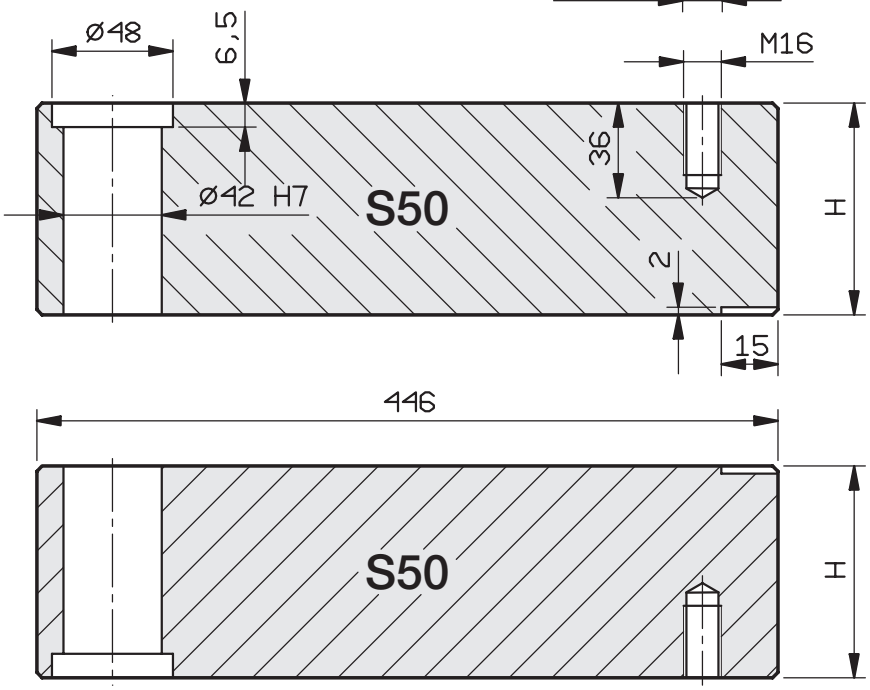

46	1730 - 2738
56	
66	
76	
96	
116	
136	
156	

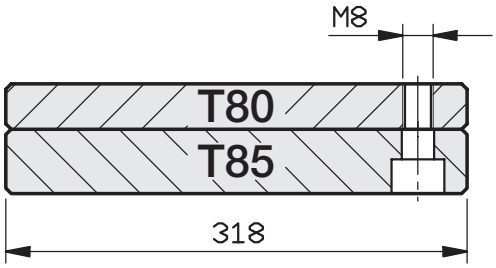

22	1730
27	

76	1730
96	
116	

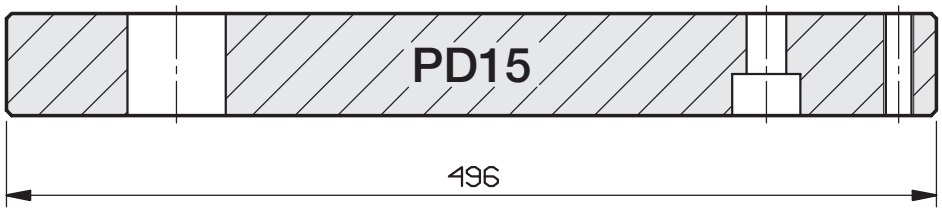

36	1730

via Watt 1/1 - 41012 Carpi (Mo) - Tel. 059 643050 - E-mail: info@ca-be.it

446 x 446

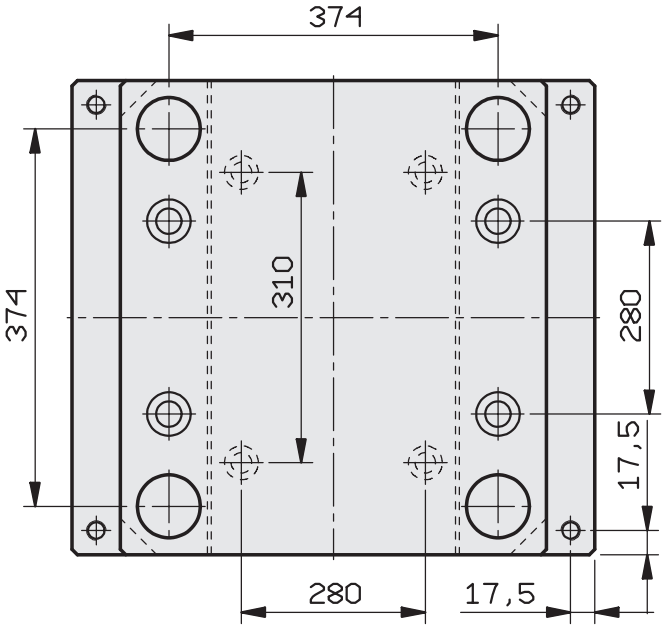

446 x 496

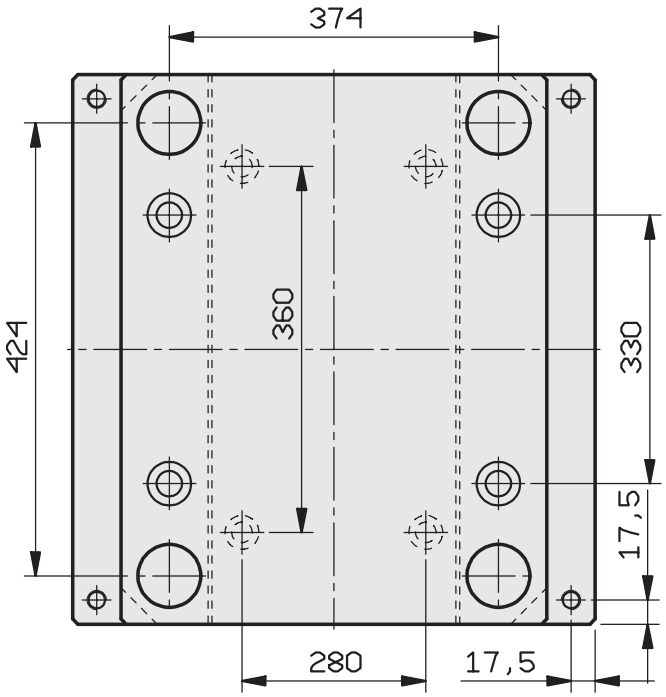

446 x 546

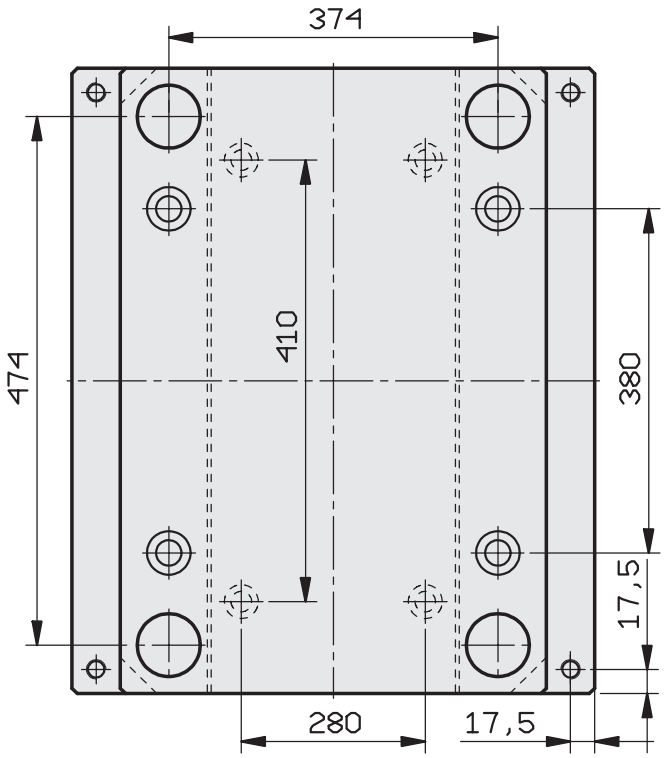

446 x 596

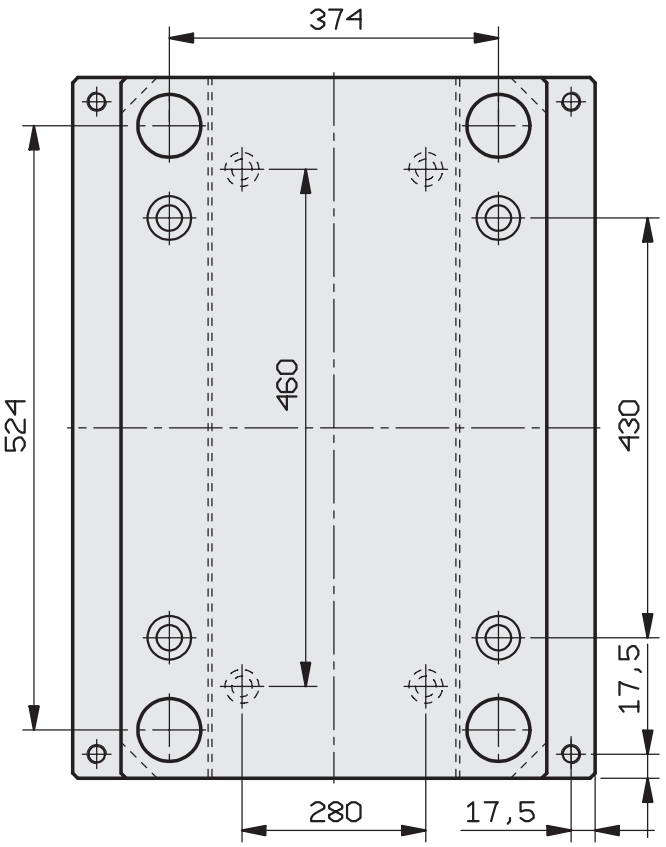

STANDARD PLATES

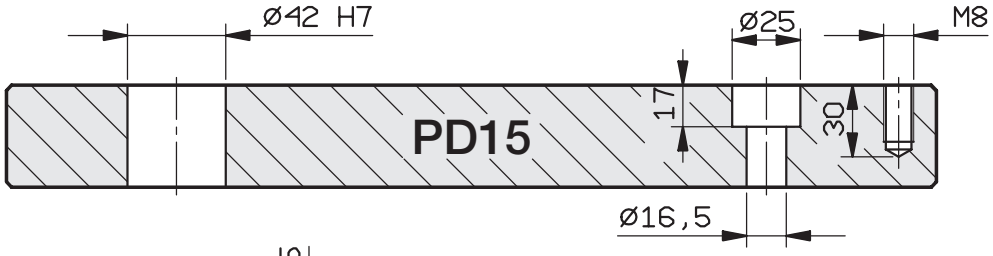

46	1730

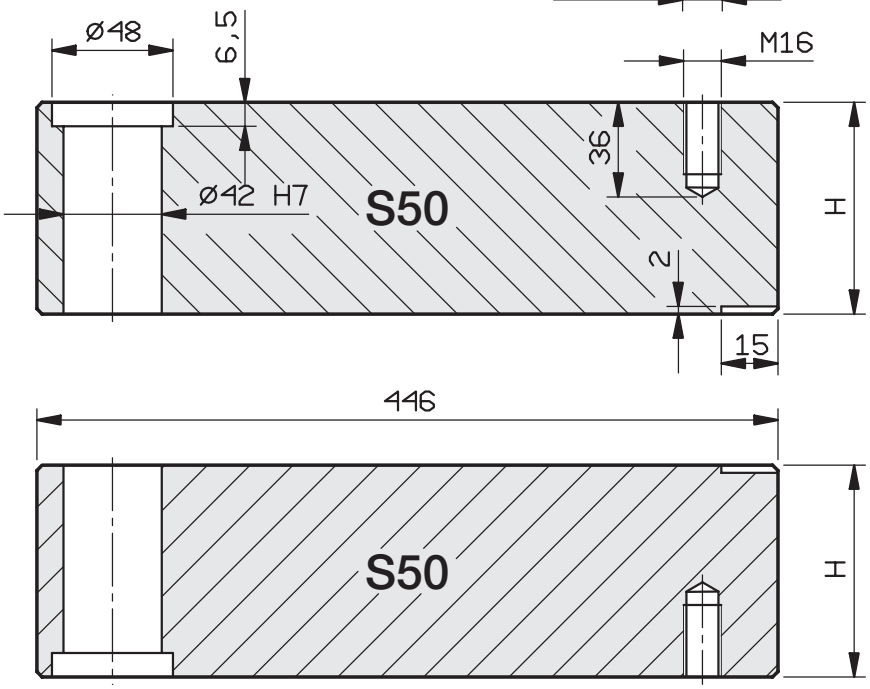

46	1730 - 2738
56	
66	
76	
96	
116	
136	
156	

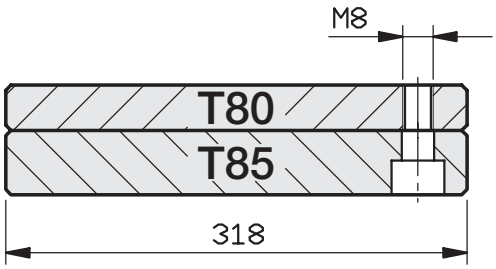

27	1730
36	

76	1730
96	
116	

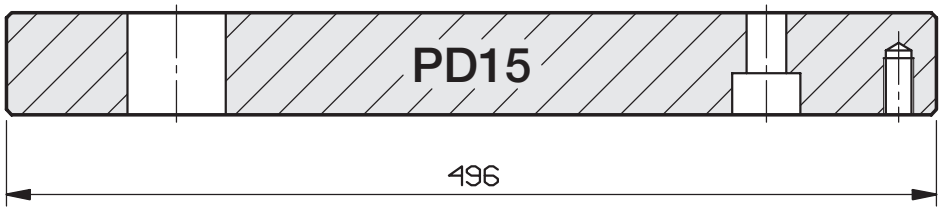

46	1730

via Watt 1/1 - 41012 Carpi (Mo) - Tel. 059 643050 - E-mail: info@ca-be.it

446 x 646

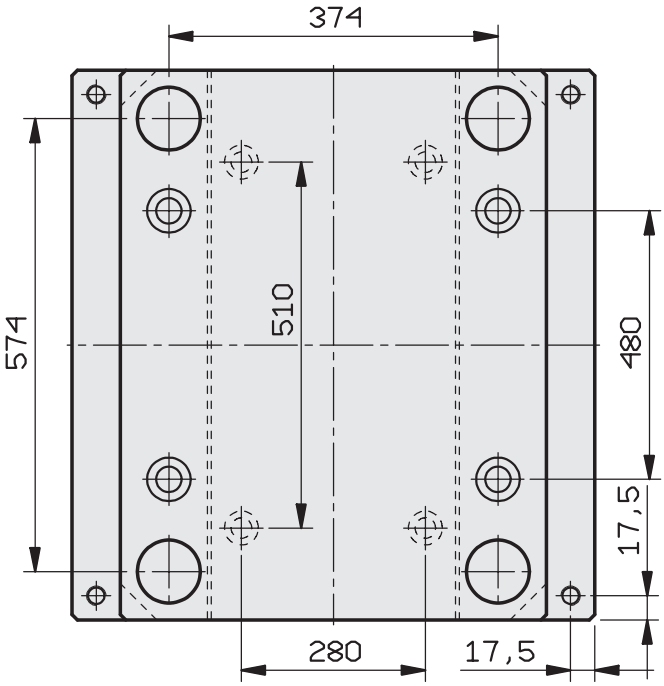

446 x 696

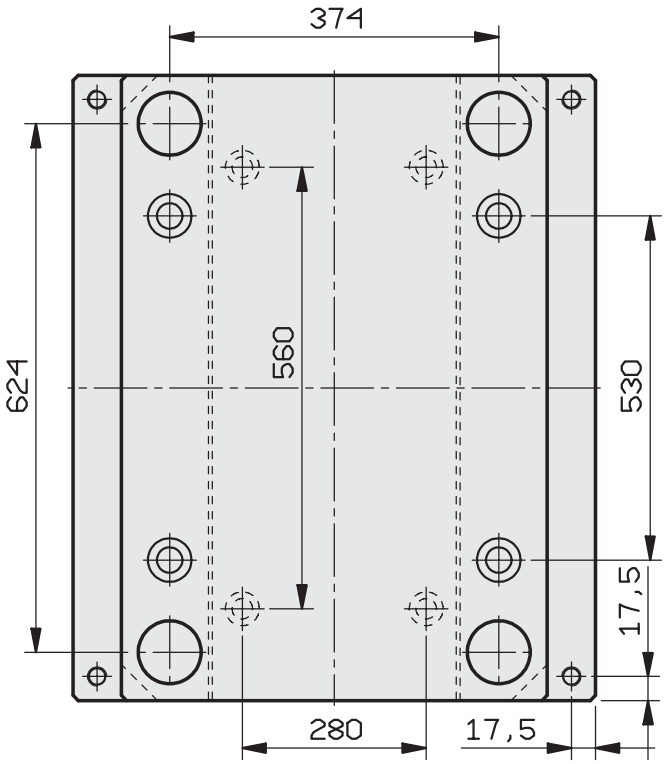

446 x 796

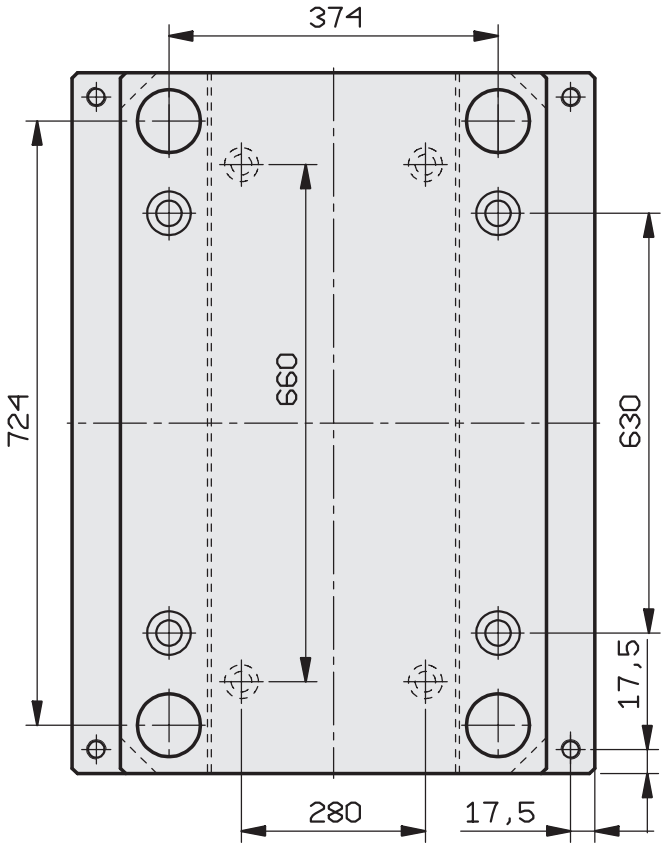

446 x 896

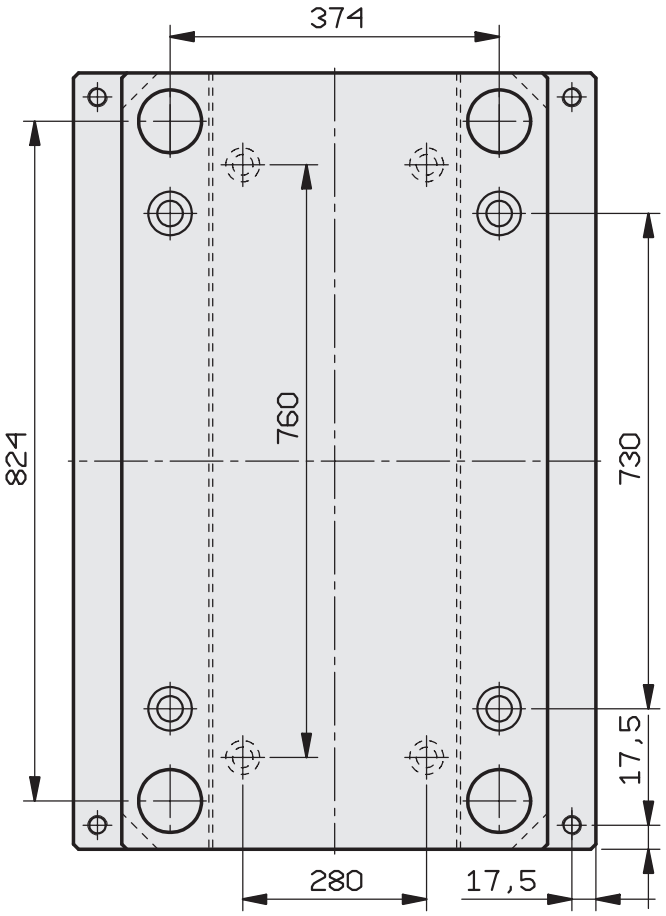

STANDARD PLATES

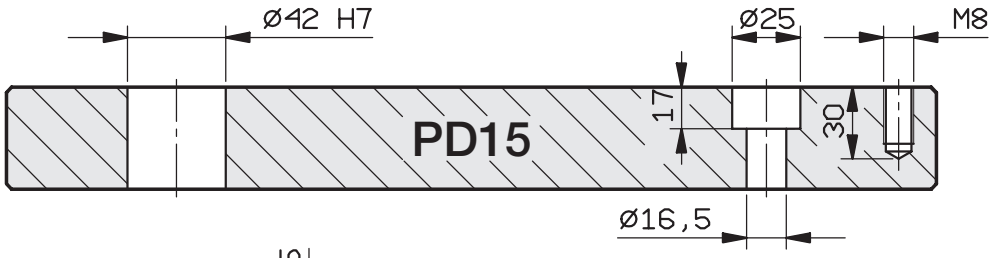

46	1730

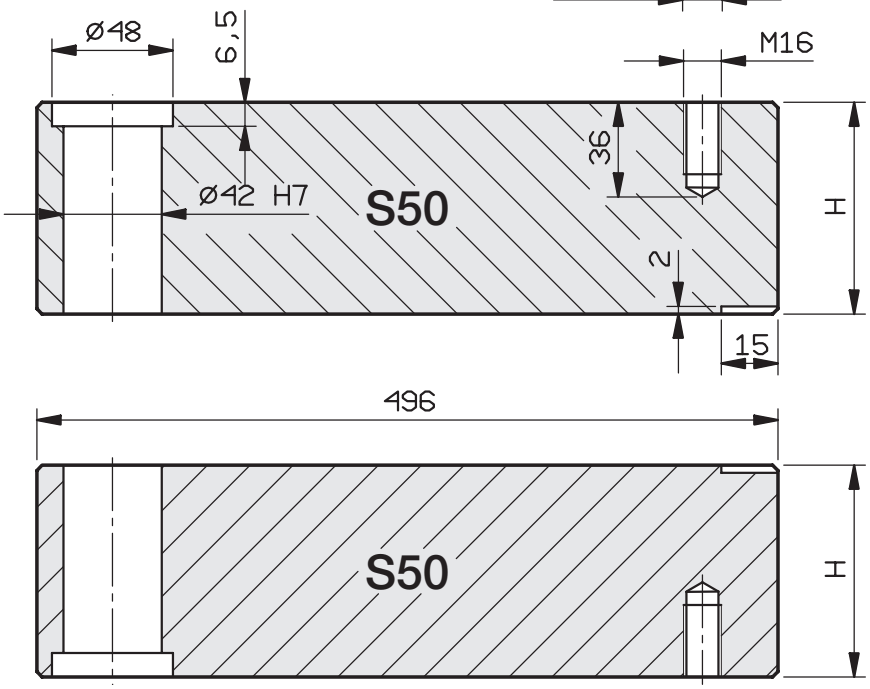

46	1730 - 2738
56	
66	
76	
96	
116	
136	
156	

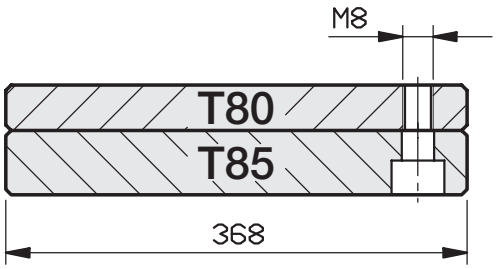

22	1730
27	

76	1730
96	
116	
156	

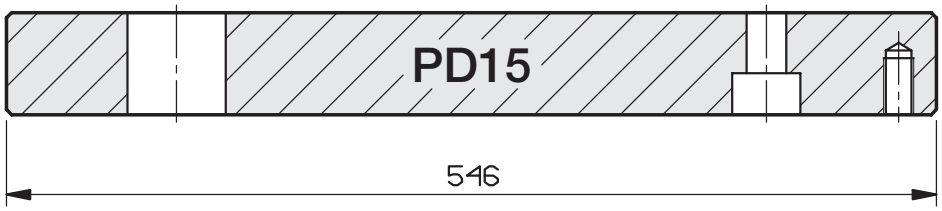

46	1730

via Watt 1/1 - 41012 Carpi (Mo) - Tel. 059 643050 - E-mail: info@ca-be.it

496 x 496

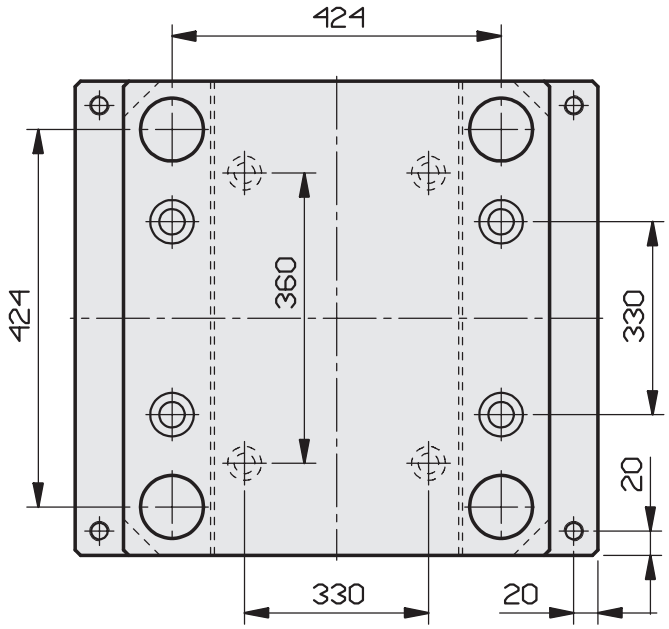

496 x 546

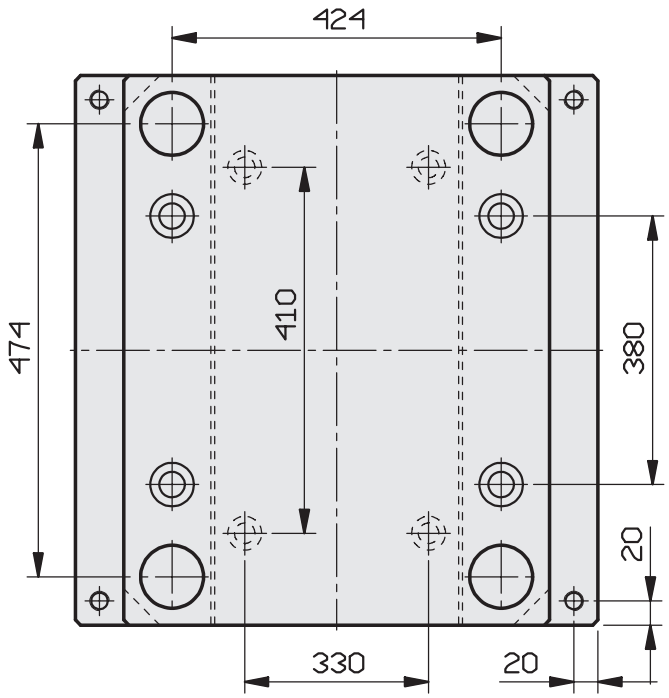

STANDARD PLATES

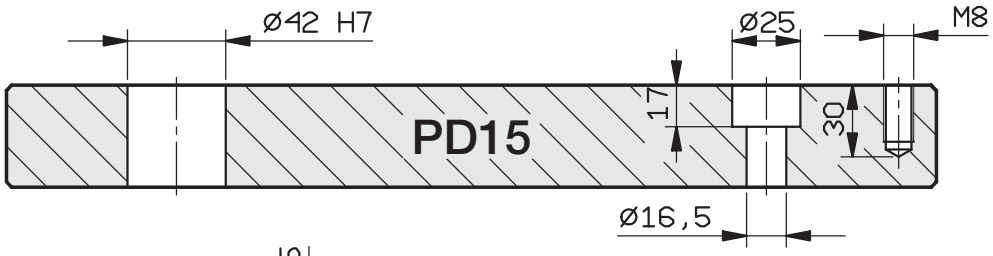

46	1730

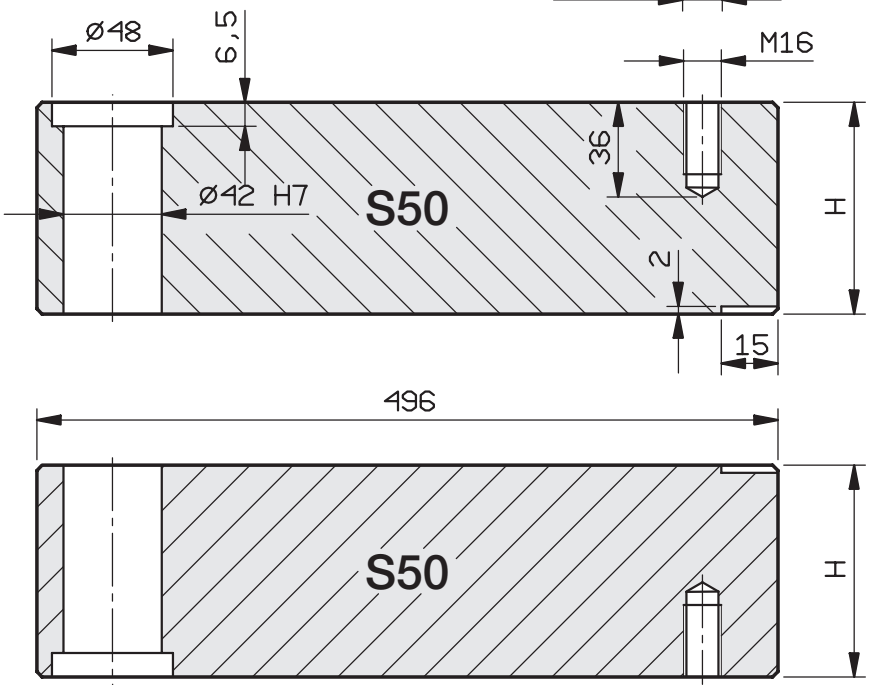

46	1730 - 2738
56	
66	
76	
96	
116	
136	
156	

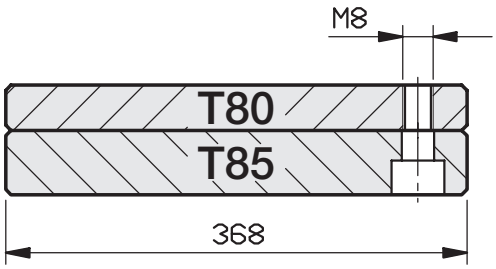

27	1730
36	

76	1730
96	
116	
156	

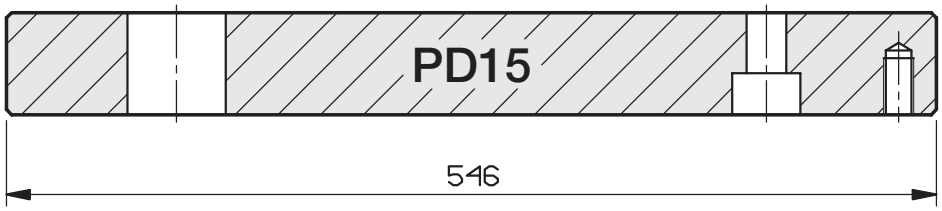

46	1730

via Watt 1/1 - 41012 Carpi (Mo) - Tel. 059 643050 - E-mail: info@ca-be.it

496 x 596

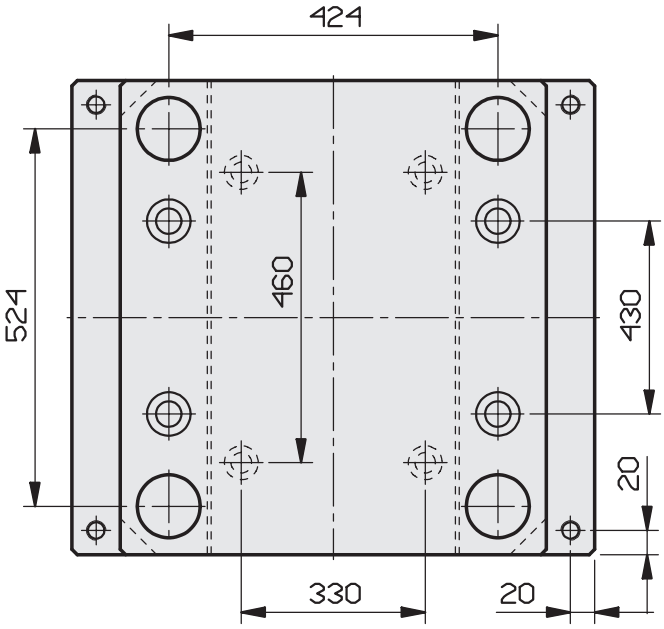

496 x 646

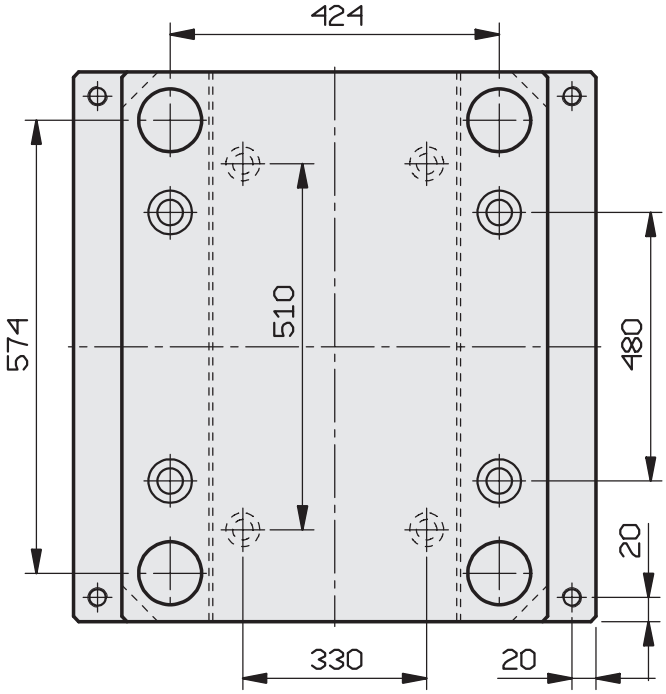

496 x 696

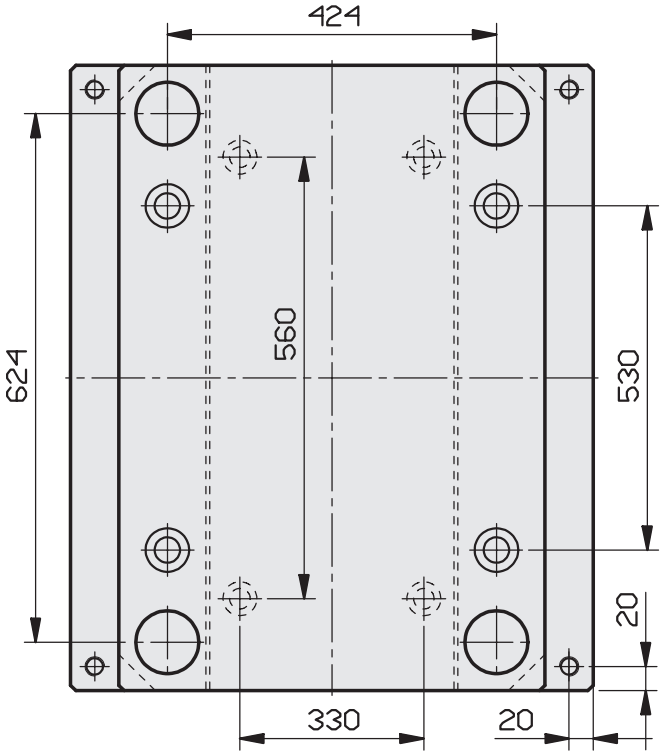

STANDARD PLATES

46	1730

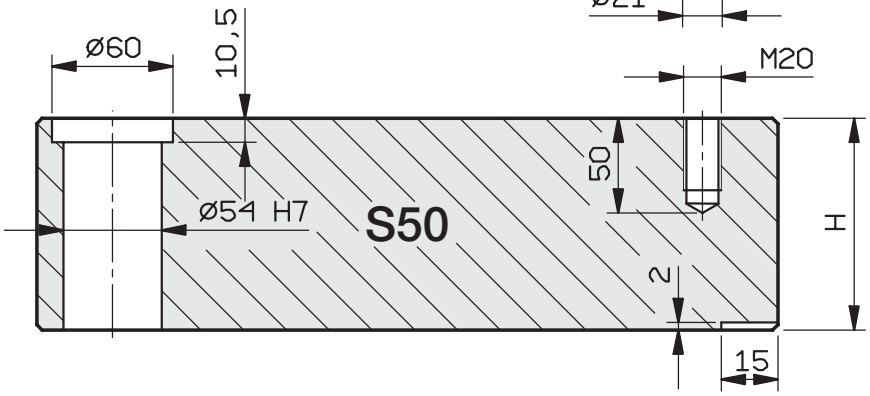

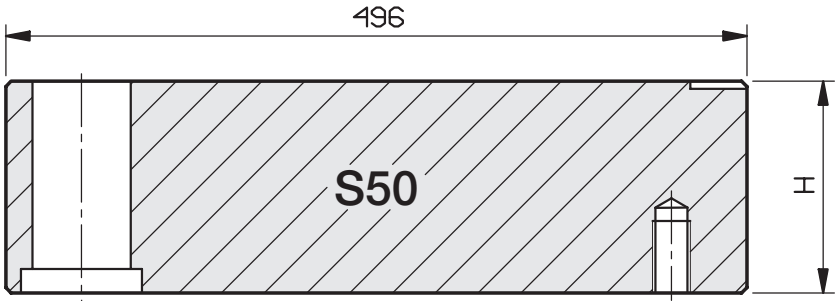

46	1730 - 2738
56	
66	
76	
96	
116	
136	
156	

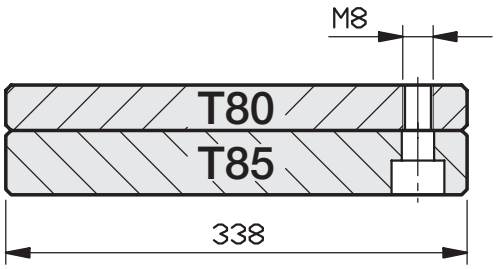

27	1730
36	

76	1730
96	
116	
156	

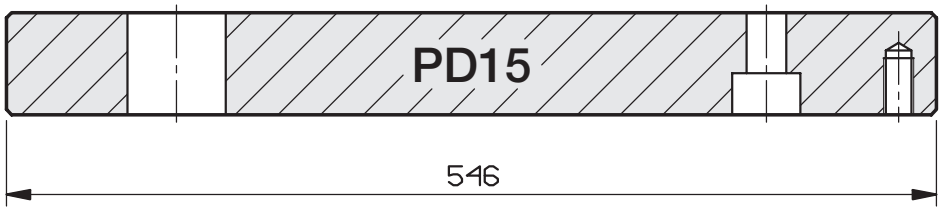

46	1730

via Watt 1/1 - 41012 Carpi (Mo) - Tel. 059 643050 - E-mail: info@ca-be.it

496 x 796

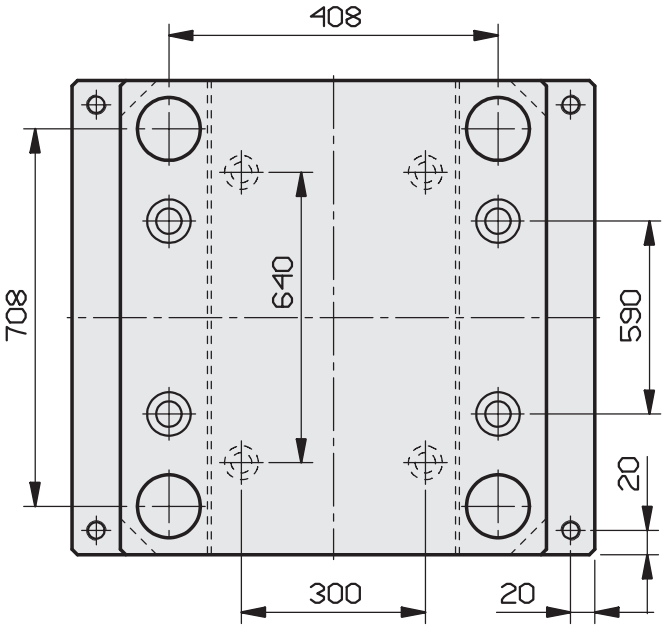

496 x 896

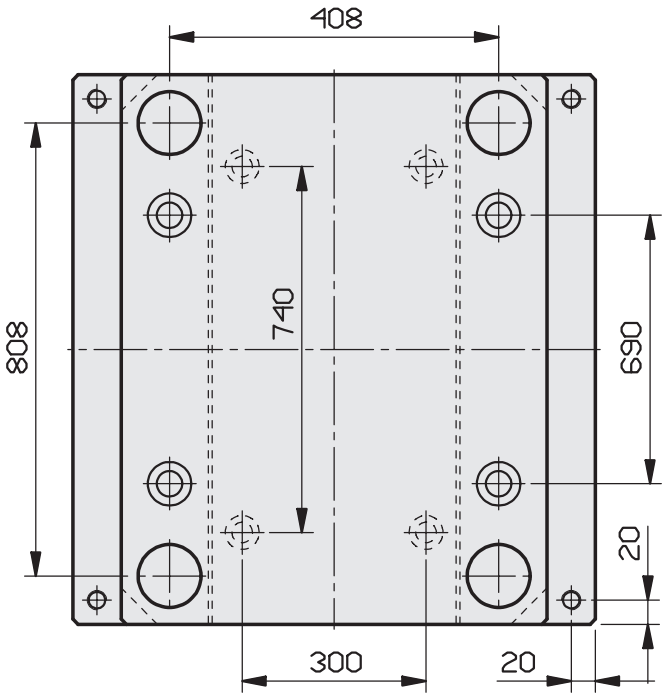

496 x 996

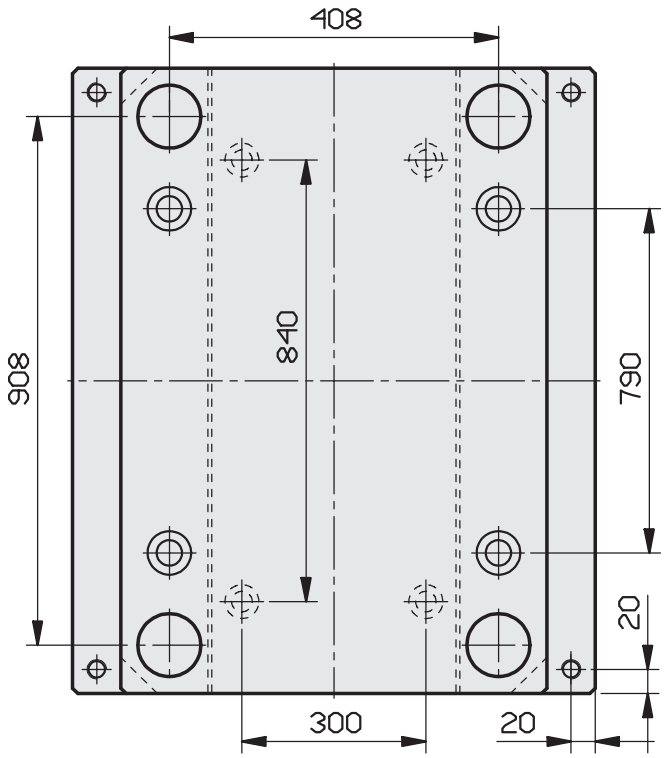

STANDARD PLATES

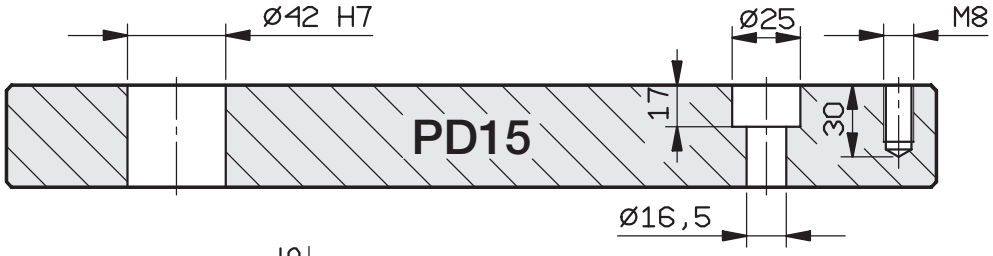

46	1730

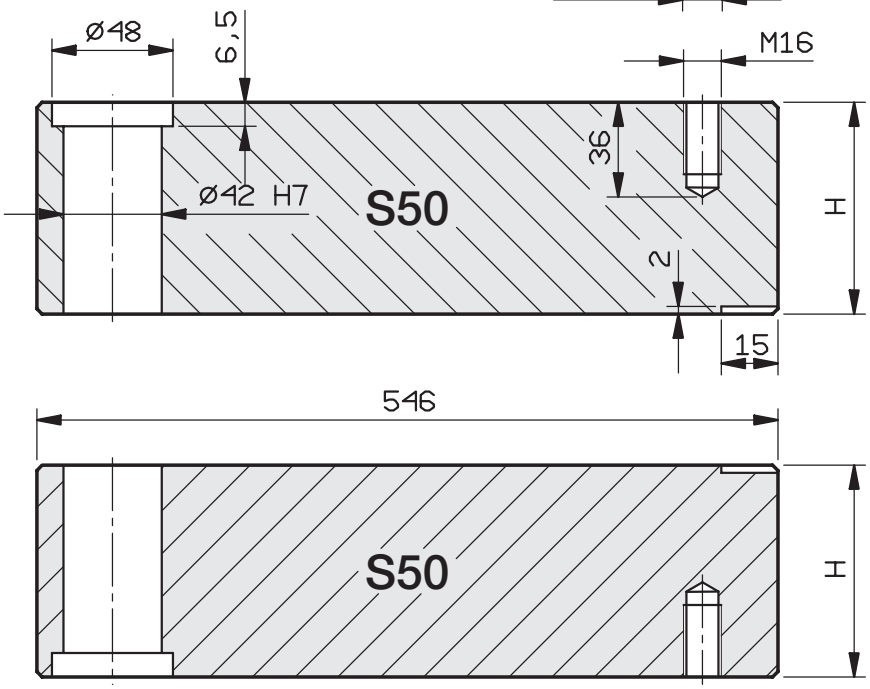

46	1730 - 2738
56	
66	
76	
96	
116	
136	
156	

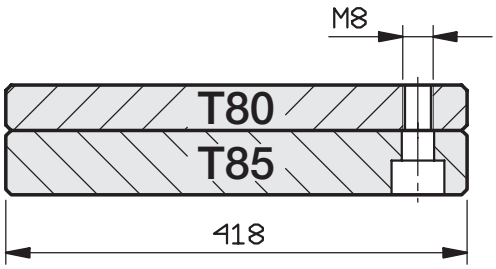

27	1730
36	

76	1730
96	
116	
156	

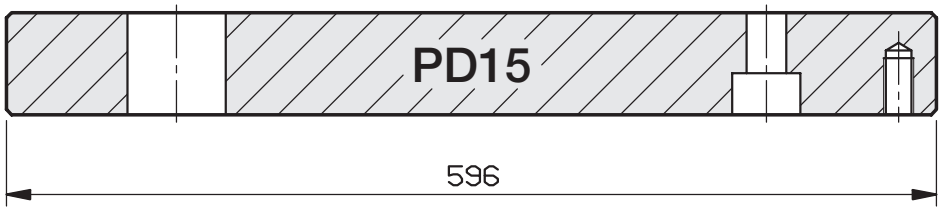

46	1730

via Watt 1/1 - 41012 Carpi (Mo) - Tel. 059 643050 - E-mail: info@ca-be.it

546 x 546

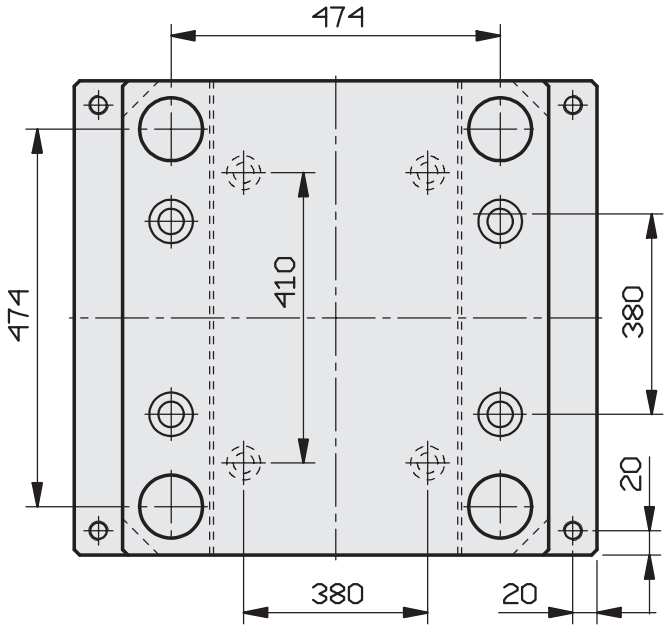

STANDARD PLATES

46	1730

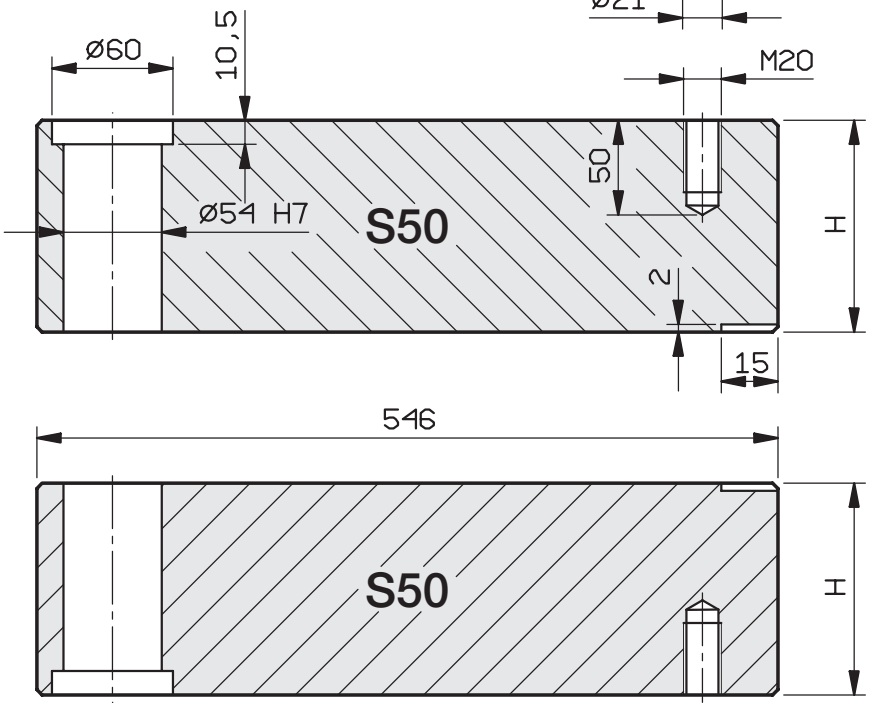

46	1730 - 2738
56	
66	
76	
96	
116	
136	
156	

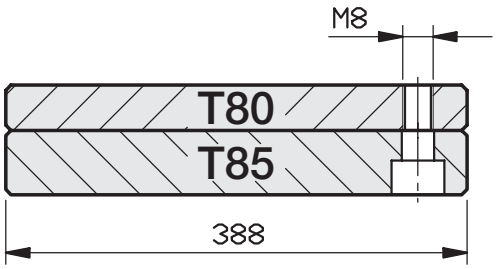

27	1730
36	

76	1730
96	
116	
156	

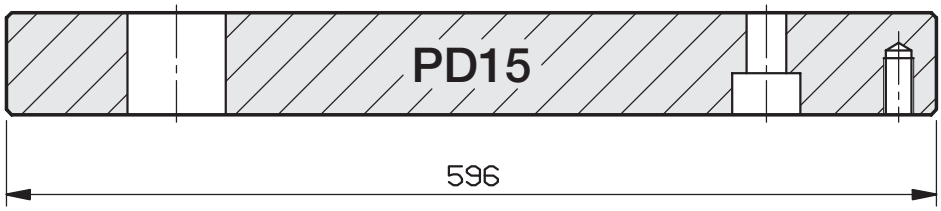

46	1730

via Watt 1/1 - 41012 Carpi (Mo) - Tel. 059 643050 - E-mail: info@ca-be.it

546 x 596

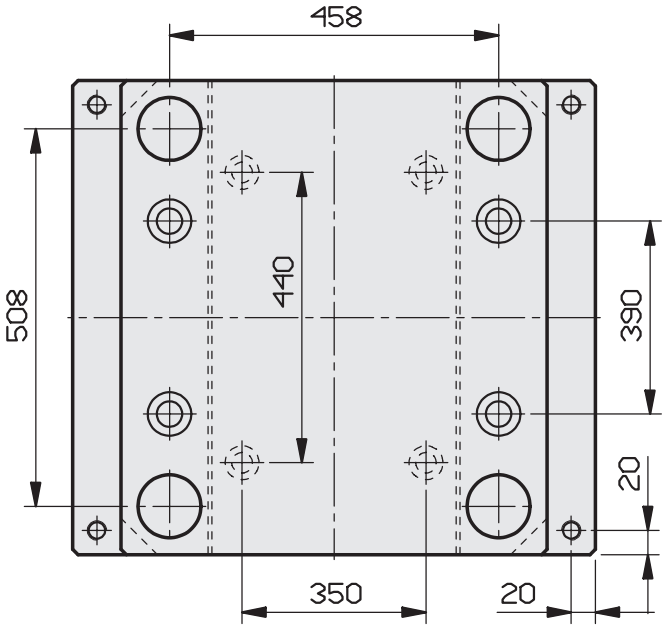

546 x 646

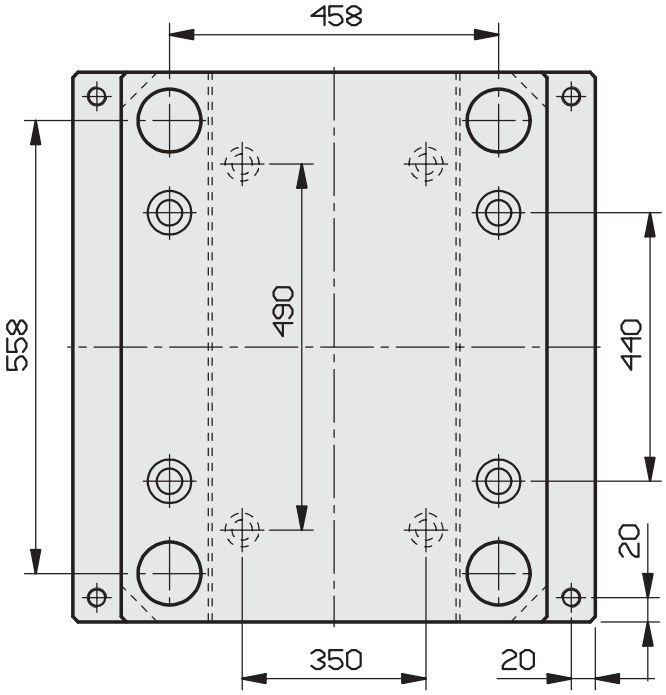

546 x 696

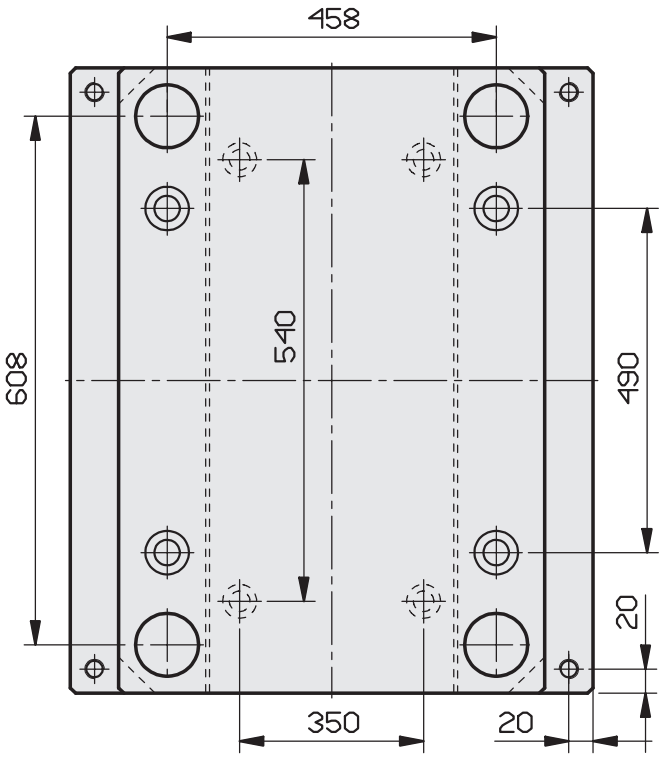

STANDARD PLATES

46	1730

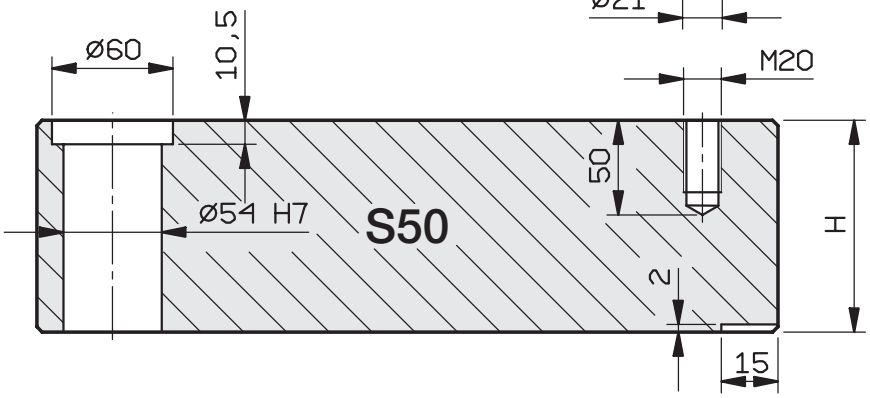

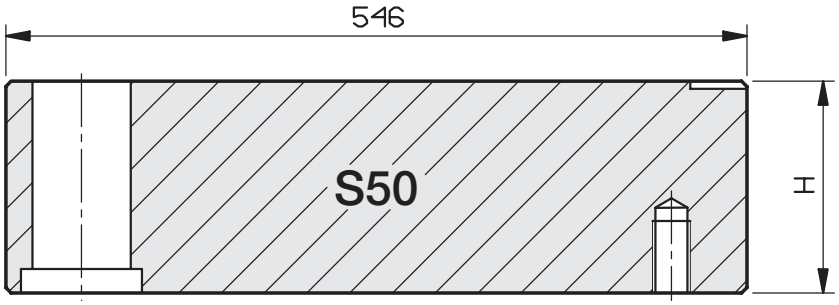

46	1730 - 2738
56	
66	
76	
96	
116	
136	
156	

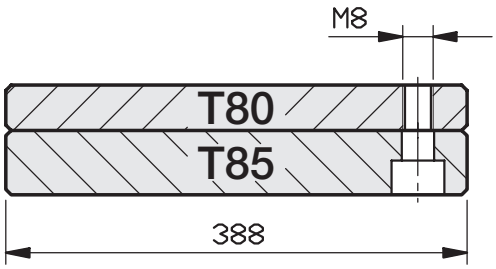

27	1730
36	

76	1730
96	
116	
156	

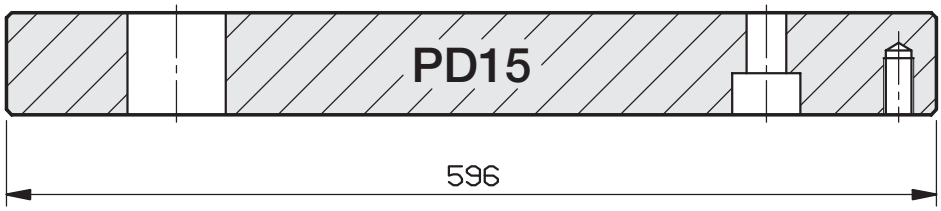

46	1730

via Watt 1/1 - 41012 Carpi (Mo) - Tel. 059 643050 - E-mail: info@ca-be.it

546 x 796

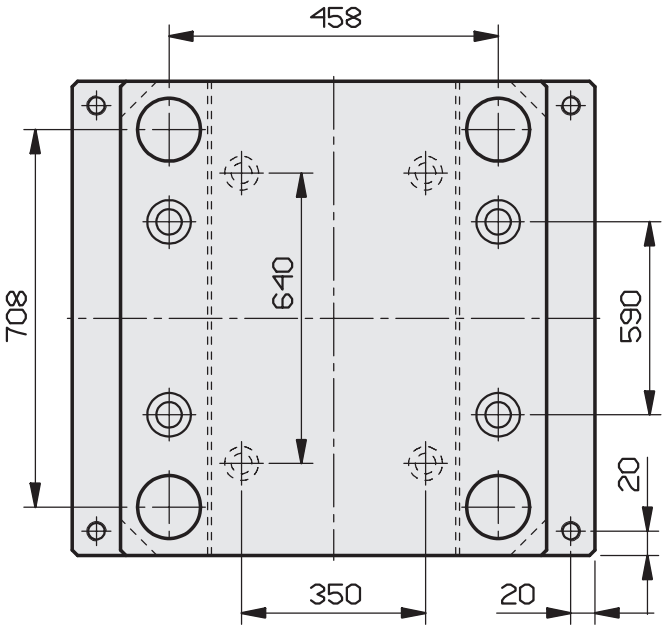

546 x 896

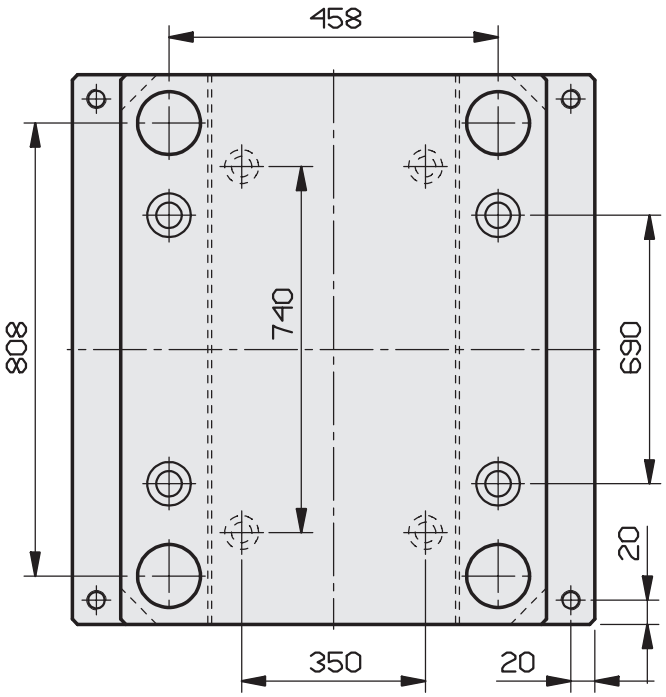

546 x 996

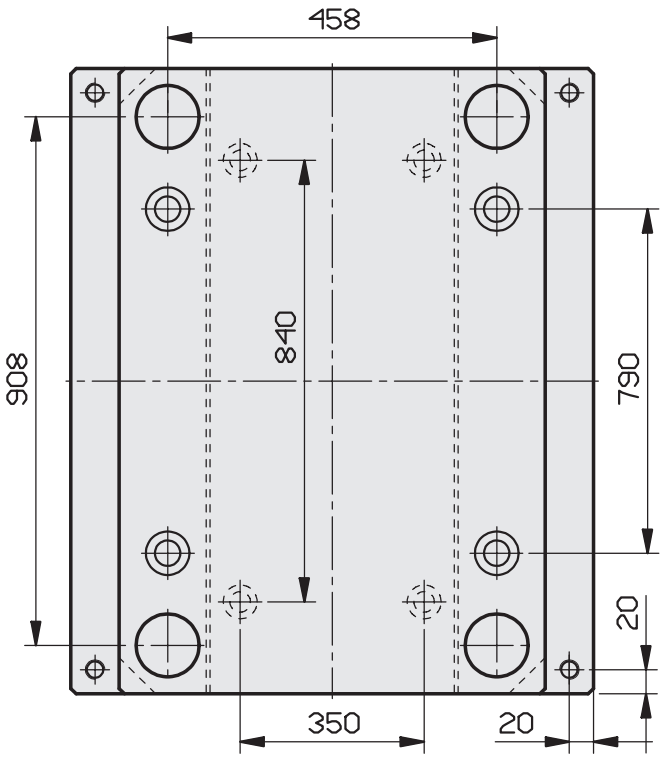

STANDARD PLATES

46	1730

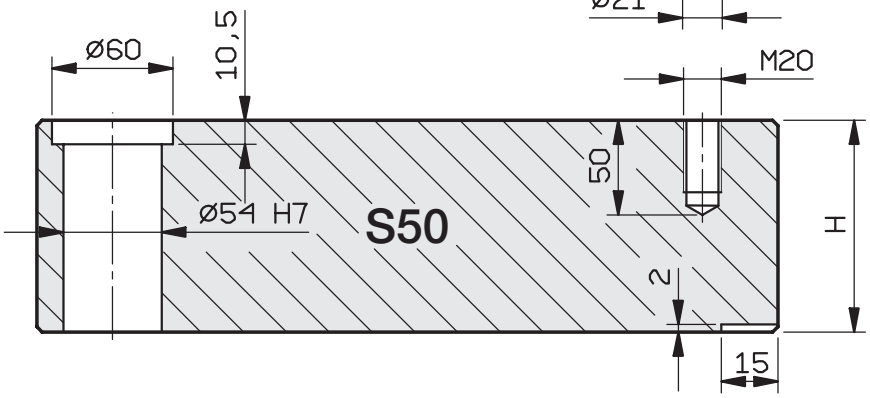

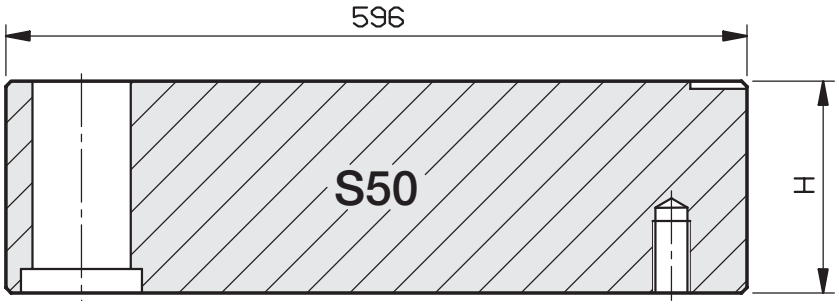

46	1730 - 2738
56	
66	
76	
96	
116	
136	
156	

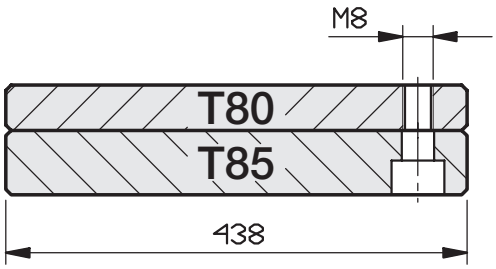

27	1730
36	

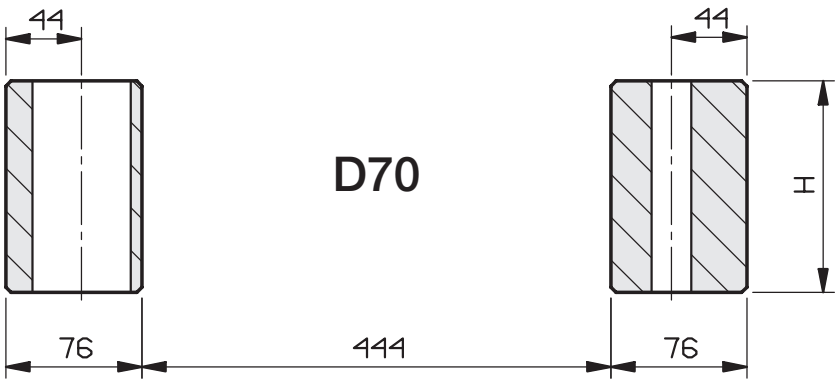

96	1730
116	
156	

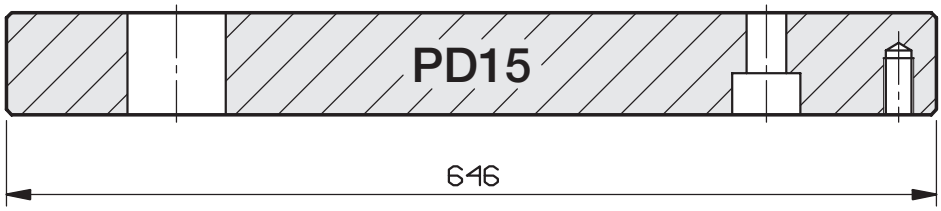

46	1730

via Watt 1/1 - 41012 Carpi (Mo) - Tel. 059 643050 - E-mail: info@ca-be.it

596 x 596

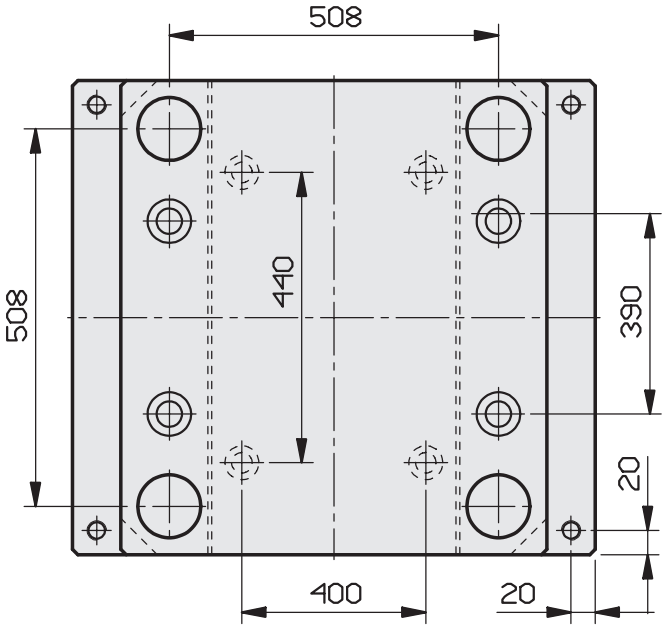

596 x 646

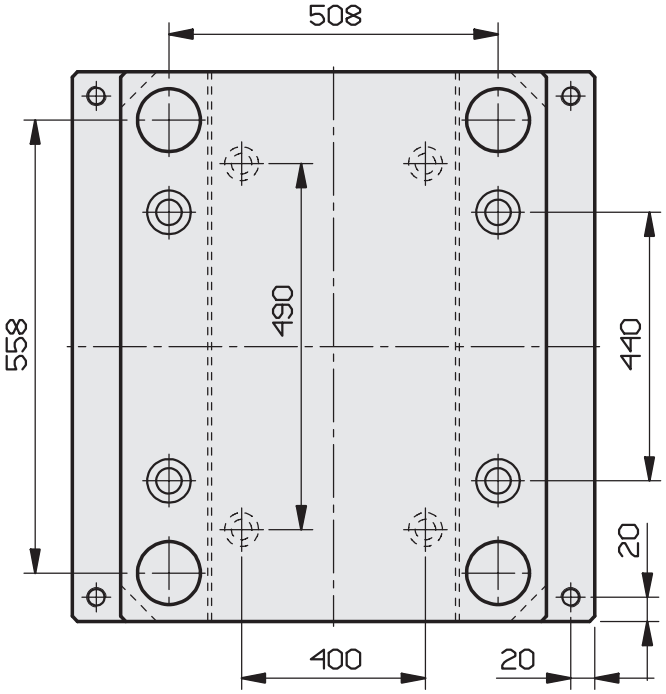

596 x 696

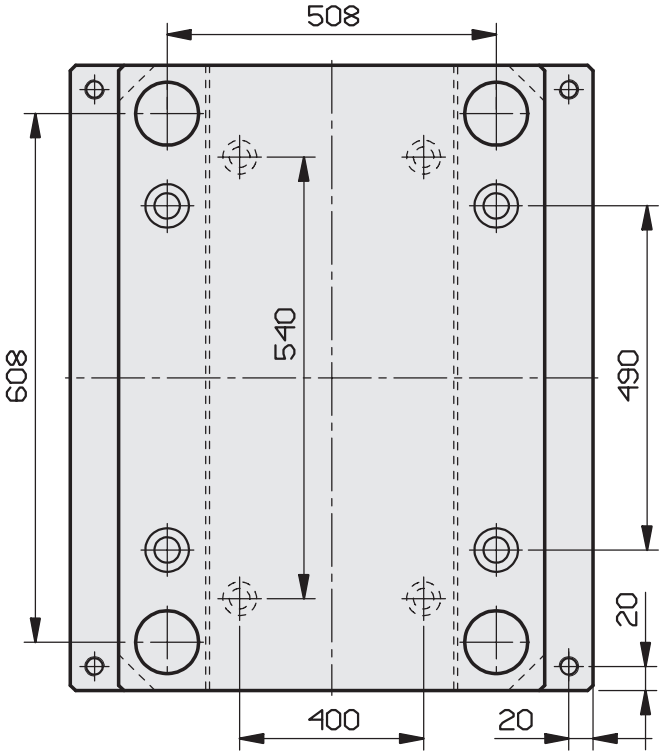

STANDARD PLATES

46	1730

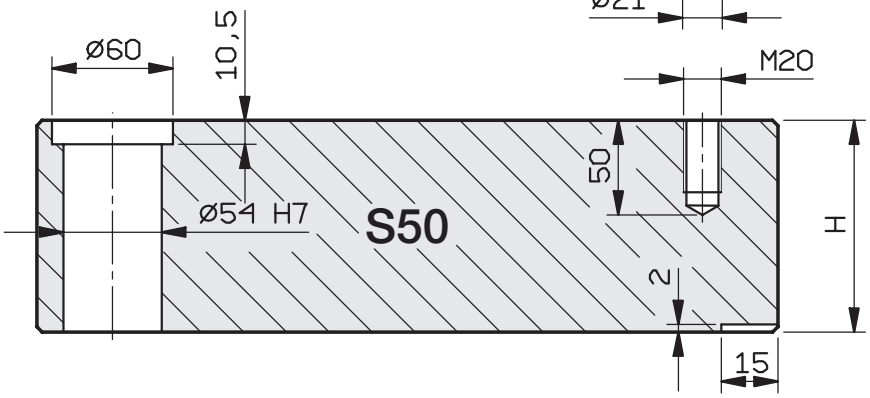

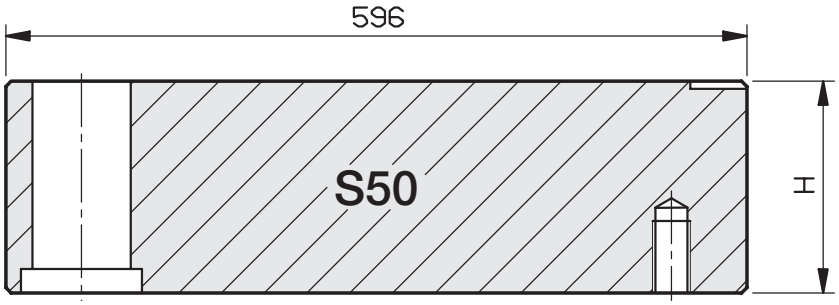

46	1730 - 2738
56	
66	
76	
96	
116	
136	
156	

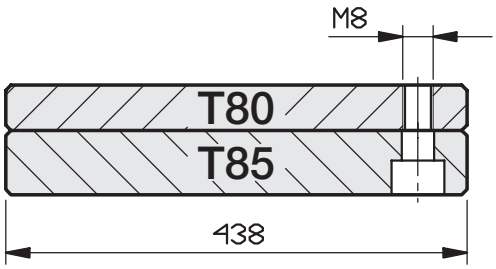

27	1730
36	

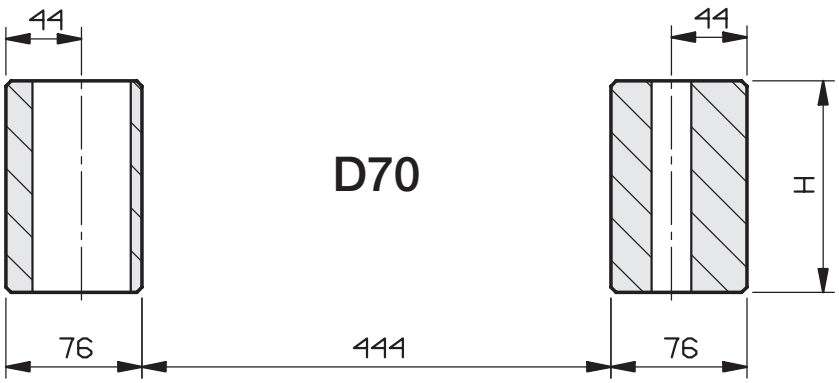

96	1730
116	
156	

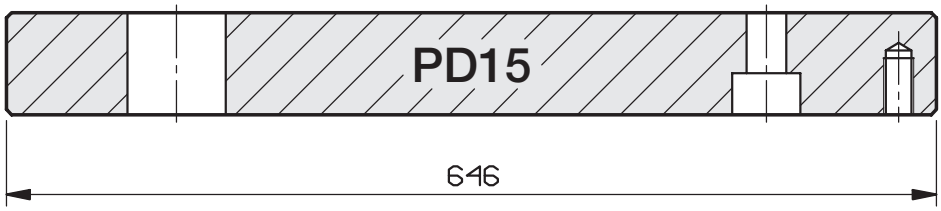

46	1730

via Watt 1/1 - 41012 Carpi (Mo) - Tel. 059 643050 - E-mail: info@ca-be.it

596 x 796

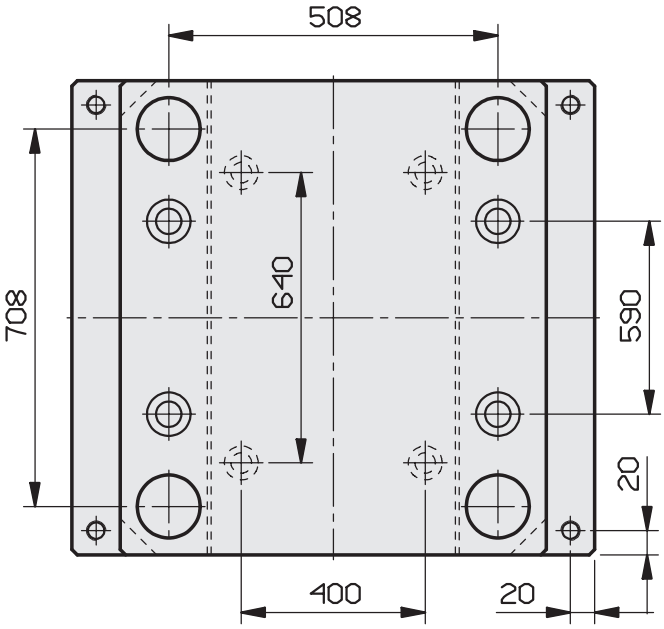

596 x 896

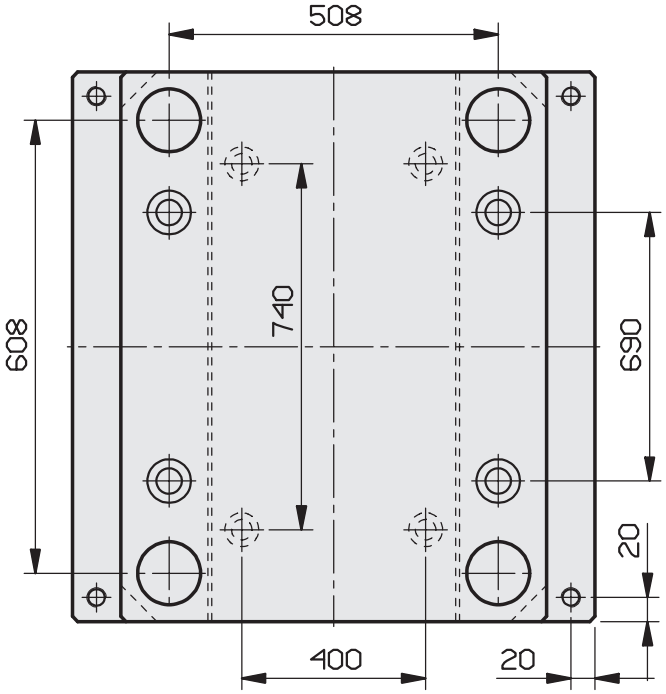

596 x 996

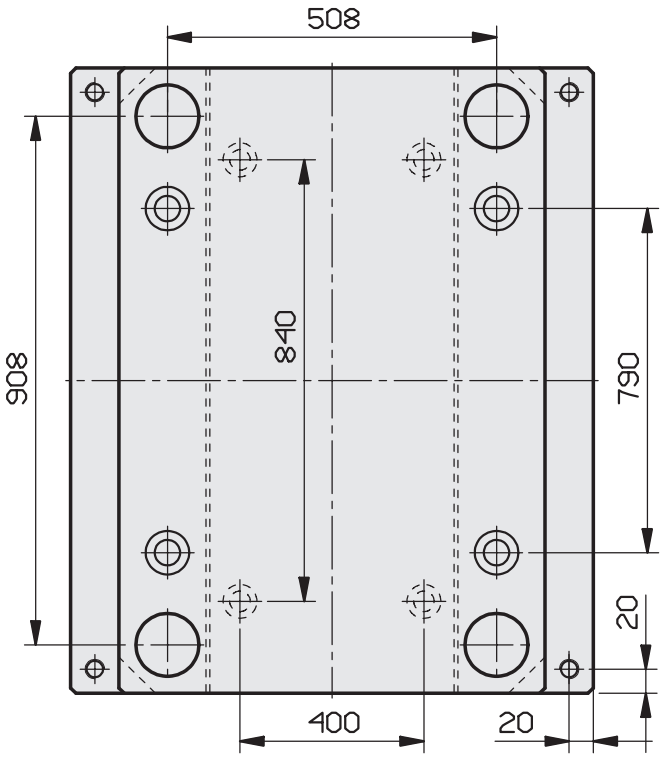

GUIDE PILLAR WITH CENTRING COLLAR

Material: 1.7131 - Hardness: 61÷63 HRC

C00M

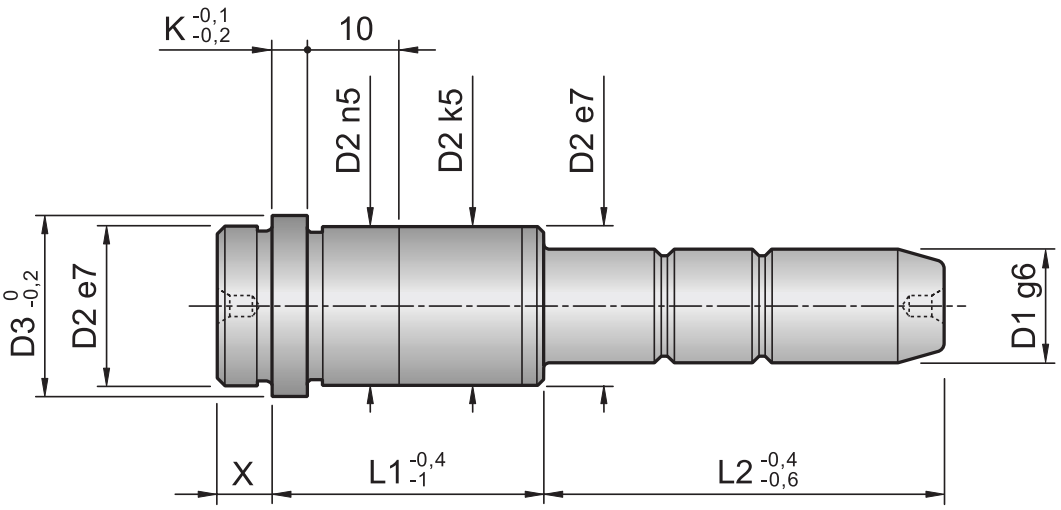

D1	D2	D3	K	X	L1	L2 = SLIDING LENGTH										
						25	35	55	75	95	115	135	155	195	235	275
14 15	20	25	6	9	17		★	★	★	★						
					22	★	★	★	★	★	★	★				
					27	★	★	★	★	★	★	★	★			
					36	★	★	★	★	★	★	★	★			
					46		★	★	★	★	★	★				
					56		★	★	★	★	★	★				
					66		★	★	★	★	★					
					76			★	★	★						
					86			★	★	★						
					96			★	★	★						
18 20	26	31	6	9	17		★	★	★	★	★					
					22		★	★	★	★	★	★				
					27		★	★	★	★	★	★	★	★	★	
					36		★	★	★	★	★	★	★	★	★	
					46		★	★	★	★	★	★	★	★	★	
					56		★	★	★	★	★	★	★	★		
					66		★	★	★	★	★	★	★	★		
					76			★	★	★	★	★	★	★		
					86			★	★	★	★	★	★	★		
					96			★	★	★	★	★	★	★		
					116				★	★	★					
					136				★	★	★					
22 24	30	35	6	9	22		★	★	★	★	★	★				
					27		★	★	★	★	★		★	★	★	★
					36		★	★	★	★	★		★	★	★	★
					46		★	★	★	★	★		★	★	★	
					56		★	★	★	★	★		★	★		
					66			★	★	★	★		★	★		
					76			★	★	★	★	★	★	★		
					86			★	★	★	★	★	★	★	★	
					96				★	★	★	★	★	★	★	
					116				★	★	★	★	★	★	★	
					136					★	★		★			
					156						★		★			

via Watt 1/1 - 41012 Carpi (Mo) - Tel. 059 643050 - E-mail: info@ca-be.it

GUIDE PILLAR WITH CENTRING COLLAR

C00M

Material: 1.7131 - Hardness: 61÷63 HRC

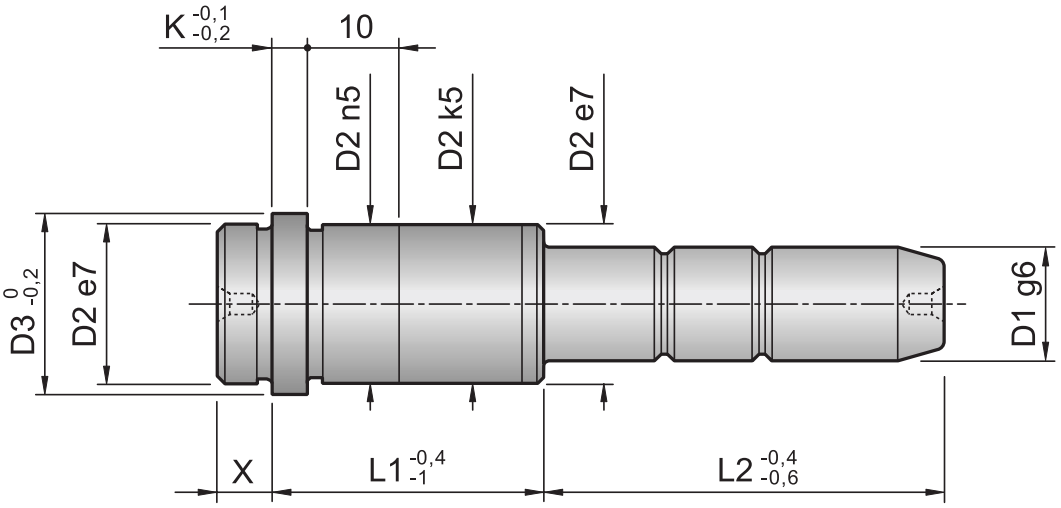

D1	D2	D3	K	X	L1	L2 = SLIDING LENGTH										
						25	35	55	75	95	115	135	155	195	235	275
30 32	42	47	6	9	27			★	★	★	★		★	★	★	★
					36			★	★	★	★		★	★	★	★
					46			★	★	★	★		★	★	★	★
					56			★	★	★	★		★	★	★	★
					66			★	★	★	★		★	★	★	★
					76			★	★	★	★	★	★	★	★	
					86			★	★	★	★	★	★	★	★	
					96				★	★	★	★	★	★		
					116				★	★	★	★	★	★		
					136					★	★		★	★		
					156					★	★		★			
					176						★		★	★		
					196						★		★	★		
40 42	54	59	10	12	36				★	★	★					
					46				★	★	★		★			
					56				★	★	★		★	★		
					66				★	★	★		★			
					76				★	★	★		★			
					86				★	★	★		★			
					96				★	★	★		★	★		
					116				★	★	★		★	★		
					136					★	★		★	★		
					156						★		★	★		
					176						★		★	★	★	
					196						★		★	★	★	

GUIDE BUSH WITH CENTRING COLLAR

Material: 1.7131 - Hardness: 61÷63 HRC

B10M

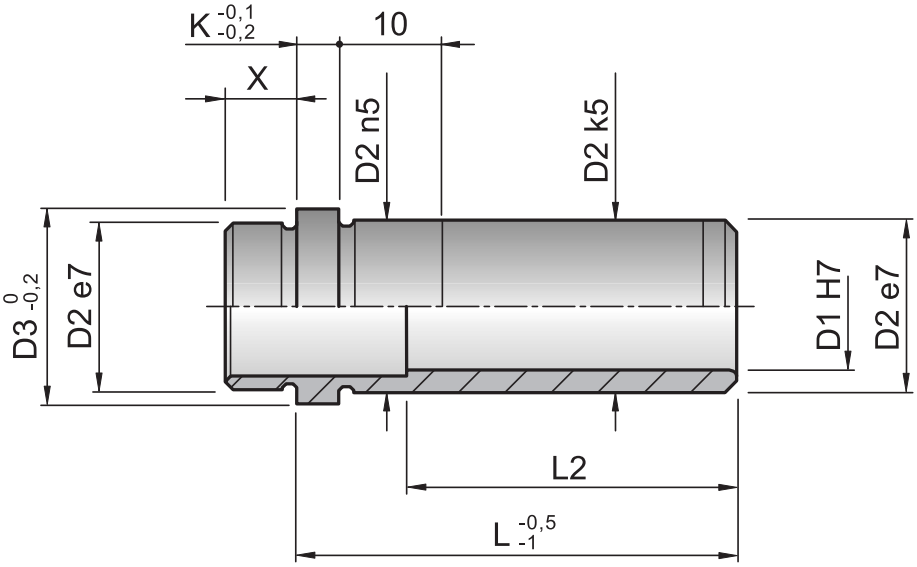

D1	D2	D3	K	X	L1													
					17	22	27	36	46	56	66	76	86	96	116	136	156	196
14 15	20	25	6	9	★	★	★	★	★	★	★	★	★	★				
18 20	26	31	6	9	★	★	★	★	★	★	★	★	★	★	★			
22 24	30	35	6	9		★	★	★	★	★	★	★	★	★	★	★		
30 32	42	47	6	9			★	★	★	★	★	★	★	★	★	★	★	
40 42	54	59	10	12				★	★	★	★	★	★	★	★	★	★	★

via Watt 1/1 - 41012 Carpi (Mo) - Tel. 059 643050 - E-mail: info@ca-be.it

GUIDE BUSH

B11M

Material: 1.7131 - Hardness: 61÷63 HRC

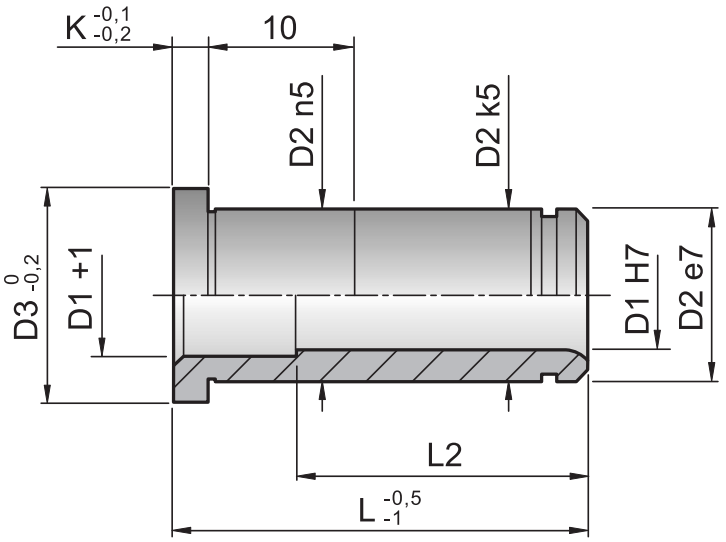

D1	D2	D3	K	L1													
				17	22	27	36	46	56	66	76	86	96	116	136	156	196
14 15	20	25	6	★	★	★	★	★	★	★	★	★	★				
18 20	26	31	6	★	★	★	★	★	★	★	★	★	★	★			
22 24	30	35	6		★	★	★	★	★	★	★	★	★	★	★		
30 32	42	47	6			★	★	★	★	★	★	★	★	★	★	★	
40 42	54	59	10					★	★	★	★	★	★	★	★	★	★

CENTRING SLEEVE
B60MH

Material: 1.7131 - Hardness: 61÷63 HRC

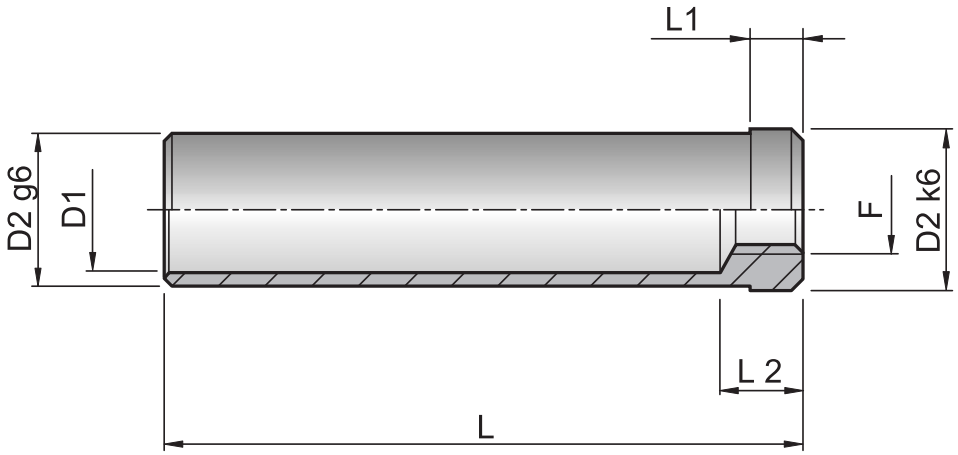

D2	D1	L1	L2	F	L													
					30	40	50	60	80	100	120	140	160	180	200	220	240	280
20	16	6	14	M12	★	★	★	★	★	★	★	★	★					
26	21	6	14	M12	★	★	★	★	★	★	★	★	★	★				
30	25	6	14	M12		★	★	★	★	★	★	★	★	★	★	★		
42	33	6	18	M12				★	★	★	★	★	★	★	★	★	★	★
54	43	6	18	M12					★		★		★		★		★	★

via Watt 1/1 - 41012 Carpi (Mo) - Tel. 059 643050 - E-mail: info@ca-be.it

via Watt 1/1 41012 Carpi (Mo) Italy
tel. +39 059 643050 - fax +39 059 692434
web: www.ca-be.it - E-mail: info@ca-be.it